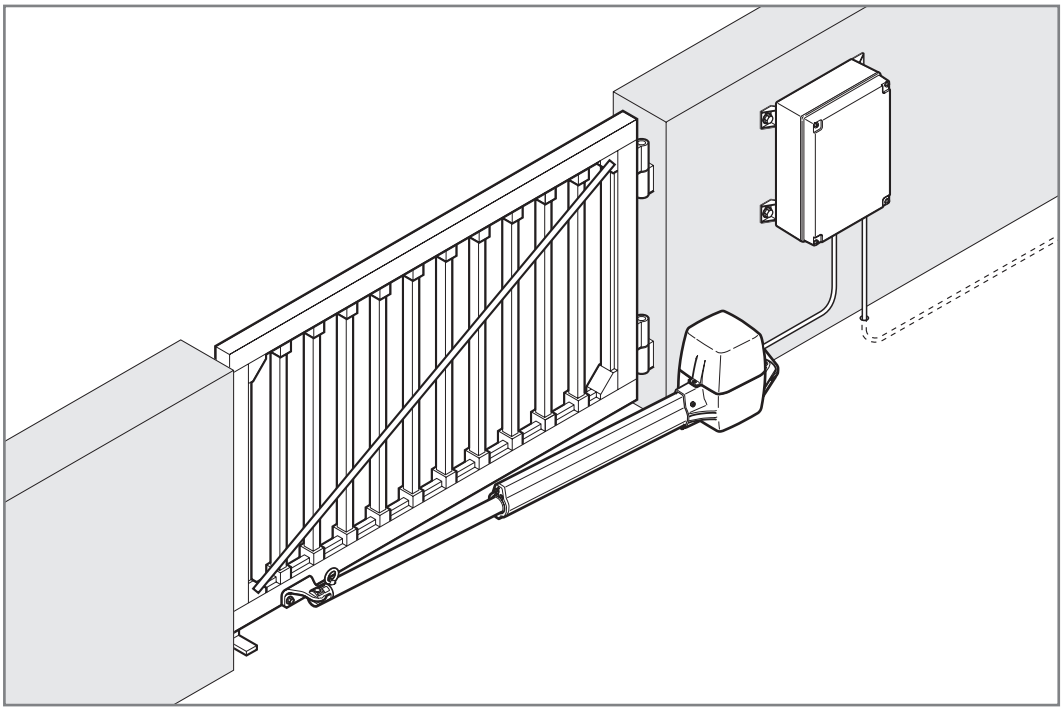

Instructions for Fitting, Operating and Maintenance

Hinge Gate operator

DA20 - DA40

4Ddoors

FOR HOME AND INDUSTRY

www.4ddoors.com.au

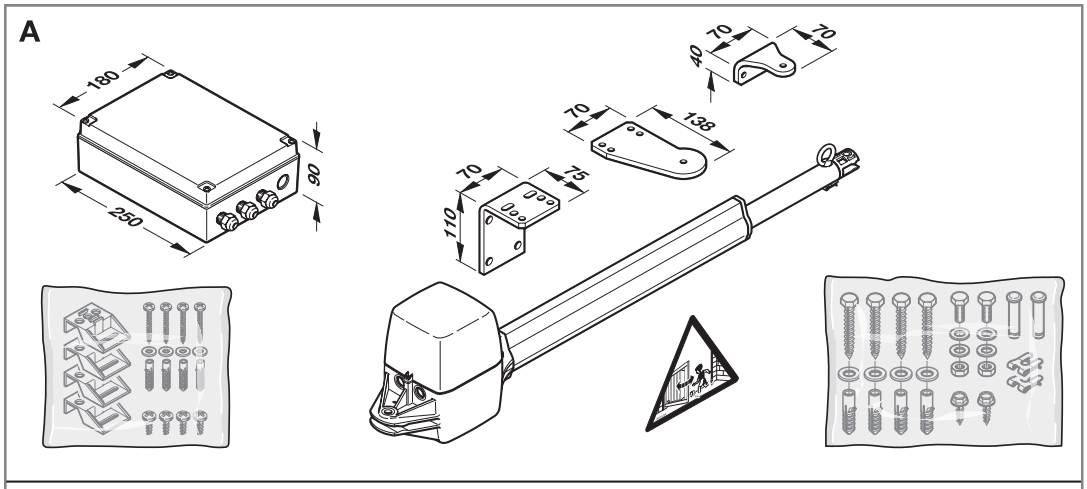
A
180
90
250
70
20
70
20
138
70
75
110

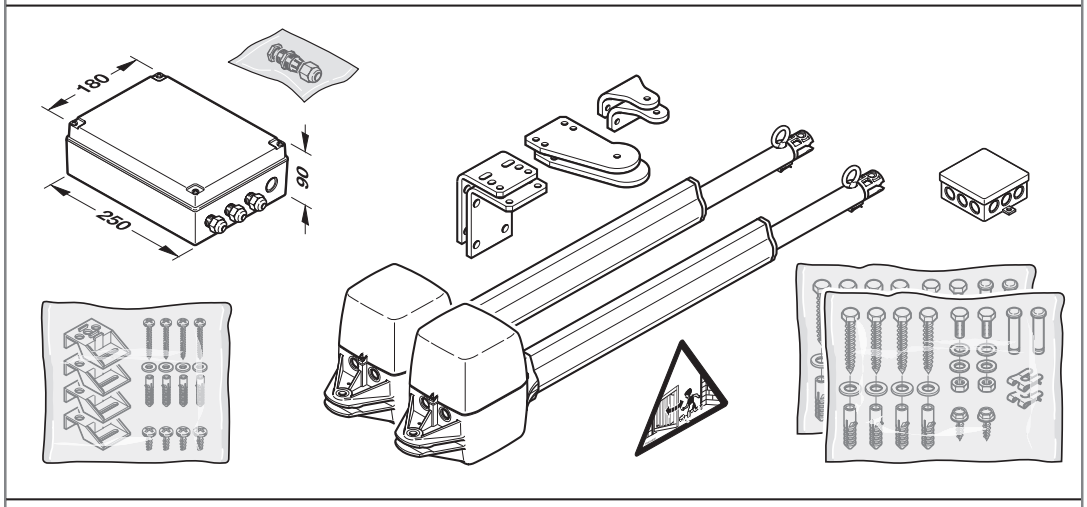
180
90
250

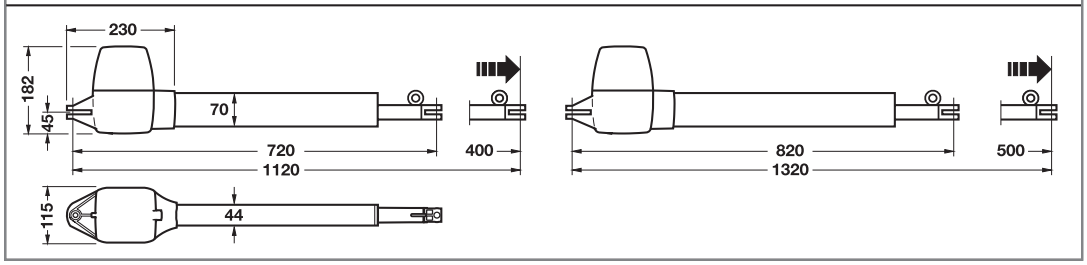
230
182
45
70
720
1120
400
820
1320
500
115
44

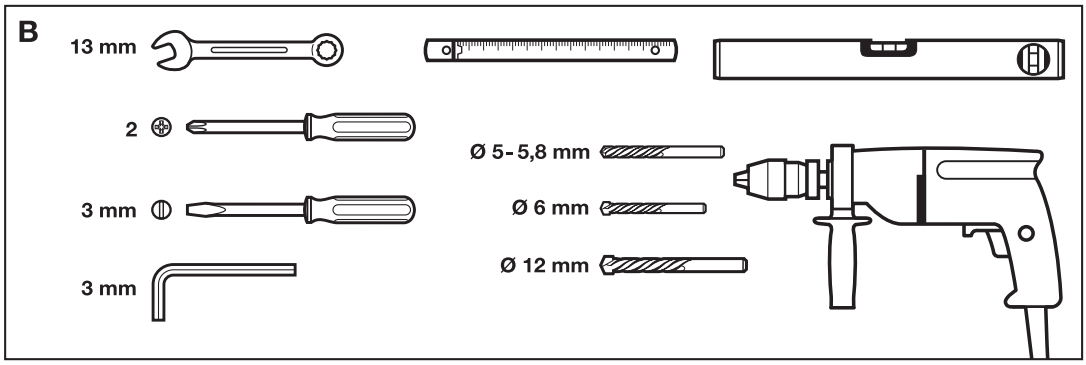
B
13 mm
2
3 mm
3 mm
Ø 5 - 5,8 mm
Ø 6 mm
Ø 12 mm

Table of Contents

A **Articles supplied 2**

B **Tools needed for assembly 2**

1 **About These Instructions 4**
1.1 Further applicable documents 4
1.2 Warnings used 4
1.3 Definitions used 4
1.4 Symbols and abbreviations used 4
1.5 Abbreviations used 5

2 **⚠ Safety Instructions 5**
2.1 Intended use 5
2.2 Inappropriate use 5
2.3 Fitter qualification 5
2.4 Safety instructions for fitting, maintenance, repairs and disassembly of the gate system 5
2.5 Safety instructions for fitting 5
2.6 Safety instructions for initial start-up and for operation 6
2.7 Safety instructions for using the hand transmitter 6
2.8 Safety instructions for inspection and maintenance 6
2.9 Approved safety equipment 6

3 **Fitting 6**
3.1 Preparation for fitting 6
3.2 Fitting the gate operator 6
3.3 Fitting the operator control 8
3.4 Mains voltage 8
3.5 Connecting the operators 8

4 **Initial Start-Up of Basic Equipment, Gate System Recording the *CLOSE* End-of-Travel Position via the Limit Switch (Factory Setting) 9**
4.1 Single-leaf gate system 9
4.2 Double-leaf gate system 10

5 **Initial Start-Up of Basic Equipment, Gate System Recording the *CLOSE* End-of-Travel Position via Mechanical End Stops or an Electric Lock 12**
5.1 Single-leaf gate system 12
5.2 Double-leaf gate system 12

6 **Gate systems that open outwards 14**
6.1 Connecting the operators 14
6.2 Using end stops 14
6.3 Using limit switches 14
6.4 Teaching in the end-of-travel positions and forces 14

7 **Further Work 14**
7.1 Force learning runs 14
7.2 Connecting safety equipment 14
7.3 Connecting additional components/accessories ... 15
7.4 Setting additional functions via the DIL switches ... 16

8 **Radio 18**
8.1 Important information 18
8.2 External receiver 19

9 **Operation 20**
9.1 Instructing users 20
9.2 Normal operation 20
9.3 Reversing during an opening run 20
9.4 Reversing during a closing run 20
9.5 Behaviour during a power failure (without emergency battery) 20
9.6 Behaviour following a power failure (without emergency battery) 20
9.7 Disengaging without a power failure 20
9.8 Factory reset 20
9.9 Operation, error and warning messages 20
9.10 Error acknowledgement 21

10 **Inspection and Maintenance 21**

11 **Optional Accessories 22**

12 **Dismantling and Disposal 22**

13 **Warranty Conditions 22**
13.1 Performance 22

14 **Excerpt from the Declaration of Incorporation 22**

15 **Technical Data 23**

16 **Overview of DIL Switch Functions 24**

Illustrated section 25

Dissemination as well as duplication of this document and the use and communication of its content are prohibited unless explicitly permitted. Noncompliance will result in damage compensation obligations. All rights reserved in the event of patent, utility model or design model registration. Subject to changes.

Dear customer,
We are delighted that you have chosen a high-quality product from our company.

1 About These Instructions

These instructions are **original operating instructions** as outlined in the EC Directive 2006/42/EC. Read through all of the instructions carefully, as they contain important information about the product. Pay attention to and follow the instructions provided, particularly the safety instructions and warnings.

Please keep these instructions in a safe place and make sure that they are available to all users at all times.

1.1 Further applicable documents

The following documents for safe handling and maintenance of the gate system must be placed at the disposal of the end user:

- These instructions
- The enclosed test log book
- The gate instructions

1.2 Warnings used

The general warning symbol indicates a danger that can lead to **injury** or **death**. In the text, the general warning symbol will be used in connection with the caution levels described below. In the illustrated section, an additional instruction refers back to the explanation in the text.

⚠ DANGER
Indicates a danger that leads directly to death or serious injuries.
⚠ WARNING
Indicates a danger that can lead to death or serious injuries.
⚠ CAUTION
Indicates a danger that can lead to minor or moderate injuries.
ATTENTION
Indicates a danger that can lead to **damage** or **destruction of the product**.

1.3 Definitions used

Hold-open phase

Waiting phase at the *OPEN* end-of-travel position before the gate closes when using the automatic timer.

Automatic timed closing

Automatic timed closing of the gate following elapse of a set phase after reaching the *OPEN* end-of-travel position.

DIL switches

Switches on the control circuit board for setting the control.

Through-traffic photocell

When the gate is passed through, the photocell stops the hold-open phase and sets it to a preset value.

Leaf A/traffic leaf

The traffic leaf in double-leaf systems that is opened for pedestrian traffic.

Leaf B/fixed leaf

In double-leaf systems, the leaf that is opened and closed along with the traffic leaf to open or close a passage.

Leaf offset

The leaf offset ensures the correct closing order if the fittings overlap.

Impulse control/impulse operation

With each push of the button, the gate is started against the previous direction of travel, or the motion of the gate is stopped.

Force learning run

The forces necessary for gate travel are taught in during this learning run.

Normal cycle

Gate movement with the taught-in travel distances and forces.

Reference run

Gate travel towards the *CLOSE* end-of-travel position in order to reset the home position (e.g. after a power failure).

Reversing cycle/safety reversal

Gate travel in the opposite direction when the safety device or force limit is activated.

Reversal limit

If a safety device is activated, gate travel is triggered in the opposite direction (reverse cycle) up to the reversal limit (max. 50 mm) shortly before the *CLOSE* end-of-travel position. If this limit is passed, no reversal occurs to ensure that the gate reaches the end-of-travel position without disrupting travel.

Distance learning cycle

Gate travel with which the operator is taught the path of travel.

Press-and-hold travel

The gate travels only as long as the respective buttons are pressed.

Pre-warning time

The time between the travel command (impulse)/end of the hold-open phase and the start of travel.

Factory reset

Resetting the taught-in values to the delivery status/ex factory setting

1.4 Symbols and abbreviations used

The illustrated section shows how to fit an operator on a **single-leaf** or **double-leaf** hinged gate.

NOTE:

All dimensions in the illustrated section are in [mm].

Some figures include this symbol with a reference to a section of the text. There you will find important information on the fitting and operation of the hinged gate operator.

In the example, 2.2 means:

See text section 2.2

In addition, in both the text section and the illustrated section at the points where the operator menus are explained, the following symbol is shown that indicates the factory settings:

Factory setting

1.5 Abbreviations used

Colour code for cables, single conductors and components The abbreviations of the colours for identifying the cables, conductors and components comply with the international colour code according to IEC 757:			
BK	Black	**RD**	Red
BN	Brown	**WH**	White
GN	Green	**YE**	Yellow
Article designations			
EWLS AP 4 EWLS AP 6		Unmonitored one-way photocell	
EL 31		One-way photocell with monitoring	
EL 301		Dynamic two-wire photocell	
BDE 221		2-channel receiver	
HNA Outdoor		Emergency battery	
BDS 140		4-button hand transmitter	
UAP 1		Universal adapter print	

2 ⚠ Safety Instructions

2.1 Intended use

The hinged gate is designed and intended exclusively for the operation of smooth-running hinged gates in the domestic, non-commercial sector. The maximum permissible gate size and maximum weight must not be exceeded. The gate must be easy to open and close by hand.

The fitting set for lifting hinges (accessories) must always be used on gates with a gradient or slope (max 6°) (see also section 3.2.5).

Regional wind loads must be taken into account if using gate infills (EN 13241-1).

Note the manufacturer's specifications regarding the gate and operator combination. Potential hazards as outlined in DIN EN 13241-1 are avoided by construction and fitting according to our guidelines.

Gate systems that are located in a public area and only have one protective device, such as a force limit, may only be operated under supervision.

2.2 Inappropriate use

Use in the commercial sector is prohibited. The operator is not designed for use with sluggish gates.

2.3 Fitter qualification

Only correct fitting and maintenance in compliance with the instructions by a competent/specialist company or a competent/qualified person ensures safe and flawless operation of the system. According to EN 12635, a specialist is a person with suitable training, specialist knowledge and practical experience sufficient to correctly and safely fit, test, and maintain a gate system.

2.4 Safety instructions for fitting, maintenance, repairs and disassembly of the gate system

⚠ WARNING

Danger of injury due to unexpected gate travel

▶ See warning in section 10

Fitting, maintenance, repairs, and disassembly of the gate system and gate operator must be performed by a specialist.

▶ In the event of a failure of the gate system or the operator, a specialist must be commissioned immediately for the inspection or repair work.

2.5 Safety instructions for fitting

The specialist carrying out the work must ensure that installation is conducted in compliance with the prevailing national job safety rules and regulations and those governing the operation of electrical equipment. The relevant national directives must be observed. Potential hazards as outlined in DIN EN 13241-1 are avoided by construction and fitting according to our guidelines.

After fitting has been completed, the installer of the gate system must declare conformity with DIN EN 13241-1 in accordance with the scope of application.

⚠ DANGER

Mains voltage

▶ See warning in section 3.4

⚠ WARNING

Danger of injury due to damaged components

▶ See warning in section 3.1

Unsuitable fixing material

▶ See warning in section 3.2

Danger of injury due to unwanted gate travel

▶ See warning in section 3.3

2.6 Safety instructions for initial start-up and for operation

⚠ WARNING

Danger of injury during gate travel
- ▶ See warning in section 4

Danger of injuries due to faulty safety equipment
- ▶ See warning in section 4.1.6 / 4.2.10 / 5.1.6 and section 5.2.8

Danger of injury due to too-high force limit
- ▶ See warning in section 7.1.1

2.7 Safety instructions for using the hand transmitter

⚠ WARNING

Danger of injury during gate travel
- ▶ See warning in section 8.1

⚠ CAUTION

Danger of injuries due to unintended gate travel
- ▶ See warning in section 8.1

2.8 Safety instructions for inspection and maintenance

⚠ WARNING

Danger of injury due to unexpected gate travel
- ▶ See warning in section 10

2.9 Approved safety equipment

The following functions or components, where available, meet cat. 2, PL “c” in accordance with EN ISO 13849-1:2008 and were constructed and tested accordingly:

- Internal power limit
- Tested safety equipment

If such properties are needed for other functions or components, this must be tested individually.

⚠ WARNING

Danger of injuries due to faulty safety equipment
- ▶ See warning in section 4.1.6 / 4.2.10 / 5.1.6 and section 5.2.8

3 Fitting

3.1 Preparation for fitting

⚠ WARNING

Danger of injury due to damaged components

A fault in the gate system or an incorrectly aligned gate may lead to serious injuries!
- ▶ Do not use the gate system if repair or adjustment work must be conducted!
- ▶ In addition, check the entire gate system (gate pivots, bearings, springs and fastenings) for wear and possible damage.
- ▶ Check for the presence of rust, corrosion, and cracks.
- ▶ For your own safety, only have a specialist conduct maintenance and repair work!

Before installing the operator and in the interests of personal safety, make sure that any necessary repairs to the gate system are carried out by a qualified specialist.

Only correct fitting and maintenance in compliance with the instructions by a specialist company or qualified person ensures safe and flawless operation of the system.

The specialist carrying out the work must ensure that installation is conducted in compliance with the prevailing national job safety rules and regulations and those governing the operation of electrical equipment. The relevant national directives must be observed. Potential hazards are avoided by construction and fitting according to our guidelines.

- ▶ Prior to fitting, deactivate or completely disassemble any mechanical locks not needed for power operation of the gate. This includes in particular any locking mechanisms connected with the gate lock.
- ▶ In addition, check that the gate is in a flawless mechanical condition, so that it can be easily operated manually and opens and closes properly (EN 12604).
- ▶ **Change to the illustrated section for the fitting and initial operation. Observe the respective text section when you are prompted to by the symbol for the text reference.**

3.2 Fitting the gate operator

⚠ WARNING

Unsuitable fixing material

Use of unsuitable fixing material may mean that the operator is insecurely attached and could come loose.
- ▶ The fitter must check that the fitting materials supplied are suitable for the purpose and the intended fitting location.
- ▶ Only use the provided fixing materials (plugs) in concrete ≥ B15 (see figures **2.2/3.1**).

NOTE:

Contrary to the illustrated section, use the appropriate connectors with different hole depths for other gate types (e.g. for timber gates use woodscrews).

Contrary to the illustrated section, the required core hole diameter may vary depending on material thickness or strength. The required diameter may be Ø 5.0 – 5.5 mm for aluminium and Ø 5.7 – 5.8 mm for steel.

3.2.1 Establishing the fitting dimensions

1. Determine dimension c, see figure **1**.
2. Determine dimension A in the table in figure **1**:
   - **a.** In column **c**, select the row that is closest to dimension c.
   - **b.** Select the required minimum opening angle in this row.
   - **c.** Find dimension A at the top.

3.2.2 Fitting principles for complying with the operating forces

In accordance with DIN EN 12453/12445, the operating forces are complied with if you observe the following points:

- In the table in figure **1**, select a combination of dimensions A and B from the section shaded in grey (preferred section).
- The centre of gravity for the gate must be in the centre of the gate (maximum permissible deviation ± 20%).
- A sound-absorbing seal DP 2 * (article no. 436 304) with the relevant C-profile is fitted to the closing edge(s).
- The operator is programmed for slow travel speed (see section 7.4.7).
- The reversal limit at max. 50 mm opening width is checked and maintained over the entire length of the main closing edge (see section 7.4.4).
- These fitting instructions have been observed.

3.2.3 Fitting principles for a long service life

The operator will have a long service life if the following conditions are met:

- Gate travel is smooth.
- The preferred section (see figure **1**) has been selected.
- For uniform gate travel speed, dimensions A and B should be as close as possible; do not exceed a max. difference of 40 mm.
- The gate travel speed has a direct influence on the resulting forces. They should be kept as low as possible at the gate closing edge(s).
  - – If possible, use the entire spindle stroke
  - – A larger dimension B reduces the speed at the gate closing edge in the *CLOSE* direction
  - – A larger dimension A reduces the speed at the gate closing edge in the *OPEN* direction
  - – Always select a large dimension A if you want a large gate opening angle. The operator must be programmed for slow speed (see section 7.4.7).
- The max. gate opening angle decreases with a larger dimension B.
  - – For a large gate opening angle and small dimension B, the operator must be programmed for slow speed.
- To reduce the overall forces on the spindle, dimension B and the distance between the pivot point of the gate and the spindle attachment to the gate must be as large as possible.

NOTES:

- Selecting an unnecessarily large opening angle will impair gate travel.
- If you cannot find a suitable dimension B(c), use a different hole pattern on the post fitting or backfill the post fitting.
- The values indicated in the table in figure **1** are only guidelines.

* Accessory, not included as standard equipment!

3.2.4 Attaching the fittings

The fittings provided are galvanized and prepared for after-treatment. Special fittings are available as accessories.

Stone or concrete posts

Observe the recommendations for plug hole edge distances. For the plugs included in the delivery, the minimum distance is one plug length.

Turn the plugs so that the direction the plug spreads is parallel to the edge.

Adhesive bond anchors, which allow a grub screw to be glued into the brickwork free of tension, offer an even better hold.

For masonry posts, the post bracket should be fitted or welded to a large steel plate that is screwed onto and covers multiple bricks.

An angle plate that goes around the edge of the post is also good for fitting.

Steel posts

Check whether the available support is stable enough. If this is not the case, it must be reinforced.

Using rivet nuts may also be expedient.

The fittings can also be welded on directly.

Wooden posts

The gate hardware must be tightened using through-holes. Use large steel washers or, even better, a steel plate on the rear of the post to ensure that it cannot come loose.

3.2.5 Fitting the operator

ATTENTION

Dirt

Drilling dust and chippings from drilling work can lead to malfunctions.

▶ Cover the operator during drilling work.

▶ Pay attention that fitting is horizontal, stable and secure at both the post and gate leaf.

▶ If necessary, use other suitable connectors. Unsuitable connectors may not hold up to the forces resulting during opening and closing.

▶ The accessory set * (see figure **2.1b**), which can be ordered separately, must be used in hinged gates with lifting hinges. Figure **2.2** shows how to fit this set.

NOTE:

If using lifting hinges, the gate must be secured against falling closed (e.g. with a single direction brake cylinder, tension spring, etc.).

To fit the hinged gate operator:

1. Fit the post fitting in accordance with the determined dimensions, grease the appropriate bolts and fix the operator (see figure **2.2**).
2. Unscrew the linking bar out to the maximum length.
3. To create a reserve, screw the linking bar back in by 1 rotation (not if dimension c is 150 mm and the operator is 720 ➜ 1120 mm or dimension c is 210 mm and the operator is 820 ➜ 1320 mm, see figure **2.3**).
4. Grease the appropriate bolts, fit the linking bar fitting and temporarily attach to the gate with a screw clamp (see figure **2.3**).

5. Check the final dimension by manually moving the gate into the end-of-travel positions while the operator is disengaged (see figure **2.4**).
6. Draw in the drill holes, remove the screw clamp, drill both holes and fix the linking bar fitting (see figure **2.5**).

3.3 Fitting the operator control

⚠ WARNING

Danger of injury due to unwanted gate travel

Incorrect assembly or handling of the operator may trigger unwanted gate travel that may result in persons or objects being trapped

- ▶ Follow all the instructions provided in this manual.

Incorrectly attached control devices (e.g. buttons) may trigger unwanted gate travel. Persons or objects may be trapped as a result.

- ▶ Install control devices at a height of at least 1.5 m (out of the reach of children).
- ▶ Fit permanently installed control devices (such as buttons) so that the entire area of travel of the gate is visible, but they are still away from moving parts.

Persons or objects may be trapped if the installed safety equipment fails.

- ▶ In accordance with BGR 232, install at least one clearly visible and easily accessible emergency command unit (emergency OFF) near the gate so the gate can be brought to a standstill in the case of danger (see section 7.3.3)

⚠ WARNING

Danger of injury due to unexpected gate travel

Unexpected gate travel can result when the emergency battery is still connected despite the mains plug being pulled out.

- ▶ Pull out the mains plug **and** the plug of the emergency battery when performing all work on the gate system.

ATTENTION

Moisture

Penetrating moisture may damage the control.

- ▶ Protect the control from moisture when you open the control housing.

- ▶ The operator control must be fit vertically and with the cable fixings towards the bottom.
- ▶ To retrofit cable fixings, punch through the pre-stamped break points, making sure that the cover is closed first.
- ▶ The length of the connection cable between the operator and control may be max. 40 m.

To fit the operator control:

1. Loosen the four screws to remove the cover on the operator control.
2. Fit the four feet on the operator control (see figure **3.1**).
3. Fit the operator control as shown in figure **3.1**.

3.3.1 Fixing the warning sign

Fix the sign warning about getting trapped in a noticeable place or near the permanently installed operator buttons.

- ▶ See figure **4**

3.4 Mains voltage

⚠ DANGER

Mains voltage

Contact with the mains voltage presents the danger of a deadly electric shock.

For that reason, observe the following warnings under all circumstances:

- ▶ Electrical connections may only be made by a qualified electrician.
- ▶ The on-site electrical installation must conform to the applicable protective regulations (230/240 V AC, 50/60 Hz)!
- ▶ If the mains connection cable is damaged, it must be exchanged by a qualified electrician to avoid danger.
- ▶ Ensure that the national regulations governing the operation of electrical equipment are complied with.
- ▶ Before undertaking any electrical work, disconnect the system from the mains supply and ensure that it cannot be inadvertently turned on.

ATTENTION

External voltage on the connecting terminals

External voltage on the connecting terminals of the control will destroy the electronics.

- ▶ Do not apply any mains voltage (230/240 V AC) to the connecting terminals of the control.

To prevent malfunctions:

- ▶ The connection cables of the operator (24 V DC) must be laid in a separate installation system from the other supply cables (230 V AC).
- ▶ If laying cables in the ground, use an underground cable (NYY) for all cables (see figure **3**).
- ▶ If laying cables in the ground as an extension, the connection to the control cables must be in a spray-water protected junction box (IP 65, to be provided on site).
- ▶ All the cables must be inserted into the control unit from below and free from distortion.

3.5 Connecting the operators

3.5.1 Operator connection with a single-leaf gate system

Fit the operator cables to the **leaf A** plug as shown in figure **5.2**.

3.5.2 Operator connection with a double-leaf gate system without threshold

▶ See figure **5.3a**

Connect the leaf that opens first or the traffic leaf to the **leaf A** plug. The operator cable for the other leaf is connected to the **leaf B** plug. If the leaf sizes vary, the smaller leaf is the traffic leaf or leaf **A**.

3.5.3 Operator connection with a double-leaf gate system with threshold

▶ See figure **5.3b**

For gates with a threshold, the first leaf that opens is the traffic leaf or leaf **A** and is connected to the **leaf A** plug. The operator cable for the other leaf is connected to the **leaf B** plug in accordance with figure **5.3**.

4 Initial Start-Up of Basic Equipment, Gate System Recording the *CLOSE* End-of-Travel Position via the Limit Switch (Factory Setting)

⚠ WARNING

Danger of injury during gate travel

If people or objects are in the area around the gate while the gate is in motion, this can lead to injuries or damage.

- ▶ Children are not allowed to play near the gate system.
- ▶ Make sure that no persons or objects are in the gate's travel range.
- ▶ Make sure that no persons or objects are located between the gate and the operator mechanics.
- ▶ If the gate has only one safety feature, only operate the gate operator if you are within sight of the gate's area of travel.
- ▶ Monitor the gate travel until the gate has reached the end-of-travel position.
- ▶ Only drive or pass through remote control gate systems if the gate is in the *OPEN* end-of-travel position!

4.1 Single-leaf gate system

4.1.1 Activating the integrated limit switch

Before teaching in the end-of-travel positions, check that the limit switch is activated. Make sure that the BN/WH wires of the limit switch are connected at plug 5/6 (see Figure **5.5a**).

4.1.2 Signal aids for the limit switch setting

The option relay has the same function as the red LED **RT** during set-up, i.e. the limit switch is not actuated if the LED is illuminated. If a lamp is connected to the option relay, the limit switch setting can be seen from afar (lamp/LED **RT** off = limit switch actuated, see Figures **7a.2**).

4.1.3 Preparations

▶ See Figures **7a/7a.1**

1. Uncouple leaf **A** and open approx. 1 m.
2. Set all DIL switches to **OFF**.
3. Connect the power supply.
4. DIL switch **1** to **ON** = **single-leaf** system
5. DIL switch **4** to **ON** = set-up mode.
   - **a.** Green LED **GN** flashes = set-up mode
   - **b.** Red LED **RT** illuminated = limit switch not actuated

4.1.4 Mechanically pre-setting the *CLOSE* end-of-travel position:

1. Slowly close leaf **A** by hand. If the limit switch is actuated, the LED **RT** (or lamp connected to the option relay) goes out.
2. If the position of the limit switch does not correspond to the desired position, it can be changed at the adjusting screw using a 3 mm Allen key (see Figure **7a.2**):
   - **a.** *CLOSE* end-of-travel position further in the *CLOSE* direction: Turn the adjusting screw in increments towards **+**.
   - **b.** *CLOSE* end-of-travel position further in the *OPEN* direction: Turn the adjusting screw in increments towards **–**.
   - **c.** At the same time, carefully move the limit switch cable in the appropriate direction to support it.
   - **d.** Open and close the leaf by hand after every adjustment to gradually reach the desired end-of-travel position.

NOTE:

Do not use a cordless screwdriver to readjust. One rotation of the adjusting screw equals 1 mm on the spindle.

4.1.5 Teaching in the *CLOSE* end-of-travel position:

1. Open leaf **A** halfway and couple.
2. Press and hold circuit board button **T**.
3. In press-and-hold operation, leaf **A** moves at slow speed in the *CLOSE* direction. The gate stops once it reaches the limit switch and the LED **RT** goes out.

NOTE:

If the gate moves in the *OPEN* direction, check the motor connection (see Figures **5.2**), if necessary, connect the motor correctly, perform a factory reset (see section 9.8) and repeat the steps described in this section.

4. The gate is now in the *CLOSE* end-of travel position. If the position of the closed gate does not correspond to the desired *CLOSE* position, a re-adjustment can be made:

   Either manually (uncoupled) in accordance with steps **1** and **2** or section 4.1.4

   or electrically as below:

   - **a.** Press circuit board button **T** until the gate is open a bit.
   - **b.** Adjust as described in section 4.1.4, steps **2a/2b**.
   - **c.** Press circuit board button **T** until the LED **RT** goes out. The gate will move to the re-adjusted end-of-travel position and stop.
   - **d.** **If necessary,** repeat steps **a** to **c** until the desired end-of-travel position has been reached.

4.1.6 Teaching in the *OPEN* end-of-travel position:

▶ See figure **7a.4**

1. Once the *CLOSE* position has been set, press and hold circuit board button **T** and move leaf **A** into the desired *OPEN* position. Then release circuit board button **T**.
2. If the system overshoots the desired position, press circuit board button **T** again to move the leaf back a bit. The leaf can also be moved forward a bit by pressing circuit board button **T** again.
3. Once the desired end-of-travel position is reached, briefly press circuit board button **P**; the *OPEN* end-of-travel position has now been taught in. The LED **GN** briefly flashes quickly and then slowly.
4. DIL switch **4** to **OFF**
   a. The connected safety equipment is activated.
   b. Operation via radio is possible
5. Use circuit board button **T** in press-and-release operation to trigger **three** complete gate cycles to teach in the forces (see section 7.1 and Figure **7a.5**).

⚠ WARNING

Danger of injuries due to faulty safety equipment

In the event of a malfunction, there is a danger of injuries due to faulty safety equipment.

▶ After the learning runs, the person commissioning the gate must check the function(s) of the safety equipment as well as the settings (see section 7.2).

The system is ready for operation only after this.

4.2 Double-leaf gate system

4.2.1 Activating the integrated limit switches

Before teaching in the end-of-travel positions, make sure that the limit switches are activated. Make sure that the BN/WH wires of the limit switch are connected at plug 5/6 (see Figure **5.5a**).

4.2.2 Signal aids for the limit switch setting

The option relay has the same function as the red LED **RT** during set-up, i.e. the limit switch is not actuated if the LED is illuminated. If a lamp is connected to the option relay, the limit switch setting can be seen from afar (lamp/LED **RT** off = limit switch actuated, see Figure **7b.2**).

4.2.3 Preparations (leaf A):

▶ See Figures **7b.1**

1. Uncouple leaf **A** and open approx. 1 m.
2. Leaf **B** must be closed, otherwise uncouple leaf **B**, move it into the *CLOSE* position, and re-couple the leaf.
3. Set all DIL switches to **OFF**.
4. Connect the power supply
5. DIL switch **4** to **ON** = set-up mode.
   a. Green LED **GN** flashes = set-up mode
   b. Red LED **RT** illuminated = limit switch not actuated

4.2.4 Mechanically pre-setting the *CLOSE* end-of-travel position (leaf A):

1. Slowly close leaf **A** by hand. If the limit switch is actuated, the LED **RT** (or lamp connected to the option relay) goes out.
2. If the position of the limit switch does not correspond to the desired position, it can be changed at the adjusting screw using a 3 mm Allen key (see Figure **7b.2**):
   a. *CLOSE* end-of-travel position further in the *CLOSE* direction: Turn the adjusting screw in increments towards **+**.
   b. *CLOSE* end-of-travel position further in the *OPEN* direction: Turn the adjusting screw in increments towards **–**.
   c. At the same time, carefully move the limit switch cable in the appropriate direction to support it.
   d. Open and close the leaf by hand after every adjustment to gradually reach the desired end-of-travel position.

NOTE:

Do not use a cordless screwdriver to readjust. One rotation of the adjusting screw equals 1 mm on the spindle.

4.2.5 Teaching in the *CLOSE* end-of-travel position (leaf A):

▶ See figure **7b.3**

1. Open leaf **A** halfway and couple.
2. Press and hold circuit board button **T**.
3. In press-and-hold operation, leaf **A** moves at slow speed in the *CLOSE* direction. The gate stops once it reaches the limit switch and the LED **RT** goes out.

NOTE:

If the gate moves in the *OPEN* direction, check the motor connection (see Figures **5.3**), if necessary, connect the motor correctly, perform a factory reset (see section 9.8) and repeat the steps described in this section.

4. The gate is now in the *CLOSE* end-of travel position. If the position of the closed gate does not correspond to the desired *CLOSE* position, a re-adjustment can be made:
   Either manually (uncoupled) in accordance with steps **1** and **2** or section 4.2.4
   or electrically as below:
   a. Press circuit board button **T** until the gate is open a bit.
   b. Adjust as described in section 4.2.4, steps **2a/2b**.
   c. Press circuit board button **T** until the LED **RT** goes out. The gate will move to the re-adjusted end-of-travel position and stop.
   d. **If necessary,** repeat steps **a** to **c** until the desired end-of-travel position has been reached.

4.2.6 Teaching in the *OPEN* end-of-travel position (leaf A):

▶ See figure **7b.4**

1. Once the *CLOSE* position has been set, press and hold circuit board button **T** and move leaf **A** into the desired *OPEN* position. Then release circuit board button **T**.
2. If the system overshoots the desired position, press circuit board button **T** again to move the leaf back a bit. The leaf can also be moved forward a bit by pressing circuit board button **T** again.

3. Once the desired end-of-travel position is reached, briefly press circuit board button **P**; the *OPEN* end-of-travel position has now been taught in. The LED **GN** briefly flashes quickly and then slowly.

4.2.7 Preparations (leaf B):

▶ See Figures **7b.5**

1. Uncouple leaf **B** and open approx. 1 m.
2. DIL switch **3** to **ON** = Teach-in double leaf operation for leaf **B**.

4.2.8 Mechanically pre-setting the *CLOSE* end-of-travel position (leaf B):

1. Slowly close leaf **B** by hand. If the limit switch is actuated, the LED **RT** (or lamp connected to the option relay) goes out.
2. If the position of the limit switch does not correspond to the desired position, it can be changed at the adjusting screw using a 3 mm Allen key (see Figure **7b.6**):
   - **a.** *CLOSE* end-of-travel position further in the *CLOSE* direction: Turn the adjusting screw in increments towards **+**.
   - **b.** *CLOSE* end-of-travel position further in the *OPEN* direction: Turn the adjusting screw in increments towards **–**.
   - **c.** At the same time, carefully move the limit switch cable in the appropriate direction to support it.
   - **d.** Open and close the leaf by hand after every adjustment to gradually reach the desired end-of-travel position.

NOTE:

Do not use a cordless screwdriver to readjust. One rotation of the adjusting screw equals 1 mm on the spindle.

4.2.9 Teaching in the *CLOSE* end-of-travel position (leaf B):

▶ See figure **7b.7**

1. Open leaf **B** halfway and couple.
2. Press and hold circuit board button **T**.
3. In press-and-hold operation, leaf **B** moves at slow speed in the *CLOSE* direction. The gate stops once it reaches the limit switch and the LED **RT** goes out.

NOTE:

If the gate moves in the *OPEN* direction, check the motor connection (see Figures **5.3**), if necessary, connect the motor correctly, perform a factory reset (see section 9.8) and repeat the steps described in this section.

4. The gate is now in the *CLOSE* end-of travel position. If the position of the closed gate does not correspond to the desired *CLOSE* position, a re-adjustment can be made:

   Either manually (uncoupled) in accordance with steps **1** and **2** or section 4.2.8

   or electrically as below:
   - **a.** Press circuit board button **T** until the gate is open a bit.
   - **b.** Adjust as described in section 4.2.8, steps **2a/2b**.
   - **c.** Press circuit board button **T** until the LED **RT** goes out. The gate will move to the re-adjusted end-of-travel position and stop.
   - **d.** **If necessary,** repeat steps **a** to **c** until the desired end-of-travel position has been reached.

4.2.10 Teaching in the *OPEN* end-of-travel position (leaf B):

▶ See figure **7b.8**

1. Once the *CLOSE* position has been set, press and hold circuit board button **T** and move leaf **B** into the desired *OPEN* position. Then release circuit board button **T**.
2. If the system overshoots the desired position, press circuit board button **T** again to move the leaf back a bit. The leaf can also be moved forward a bit by pressing circuit board button **T** again.
3. Once the desired end-of-travel position is reached, briefly press circuit board button **P**; the *OPEN* end-of-travel position has now been taught in. The LED **GN** briefly flashes quickly and then slowly.
4. Set DIL switch **3** to **OFF**.
5. Set DIL switch **4** to **OFF**.
   - **a.** The connected safety equipment is activated.
   - **b.** Operation via radio is possible.
6. Use circuit board button **T** in press-and-release operation to trigger **three** complete gate cycles to teach in the forces (see section 7.1 and Figure **7b.9**).
   - **a.** The forces have been taught in if LED **GN** is illuminated.
7. If necessary, set the leaf offset function (see section 4.2.11).

⚠ WARNING

Danger of injuries due to faulty safety equipment

In the event of a malfunction, there is a danger of injuries due to faulty safety equipment.

▶ After the learning runs, the person commissioning the gate must check the function(s) of the safety equipment as well as the settings (see section 7.2).

The system is ready for operation only after this.

4.2.11 With/without leaf offset and size of leaf offset

▶ See Figures **9.1/9.2**

In **double-leaf** gate systems with a threshold, the leaves may collide during travel. This is why the leaf offset must be activated after the teach-in process!

To ensure that the leaves do not collide during travel in a **double-leaf** gate system, a large leaf offset is expedient in asymmetrical gates with a threshold whereas a small leaf offset suffices for symmetrical gates with a threshold.

Setting the leaf offset function:

1. Set the leaf offset function with DIL switch **2**:

2 ON	Without leaf offset: Leaf **A** and **B** open and close simultaneously.
2 OFF	With leaf offset: Leaf **A** opens before leaf **B**; leaf **B** closes before leaf **A**.

2. Set the size of the leaf offset with DIL switch **3**:

3 ON	Teach in leaf B/**small leaf offset**
3 OFF	Teach in leaf A/**large leaf offset**

5 Initial Start-Up of Basic Equipment, Gate System Recording the *CLOSE* End-of-Travel Position via Mechanical End Stops or an Electric Lock

⚠ WARNING

Danger of injury during gate travel

If people or objects are in the area around the gate while the gate is in motion, this can lead to injuries or damage.

- ▶ Children are not allowed to play near the gate system.
- ▶ Make sure that no persons or objects are in the gate's travel range.
- ▶ Make sure that no persons or objects are located between the gate and the operator mechanics.
- ▶ If the gate has only one safety feature, only operate the gate operator if you are within sight of the gate's area of travel.
- ▶ Monitor the gate travel until the gate has reached the end-of-travel position.
- ▶ Only drive or pass through remote control gate systems if the gate is in the *OPEN* end-of-travel position!

NOTE:

We recommend fitting a mechanical end stop for the *CLOSE* end-of-travel position. This has the following advantages:

- The leaves are positioned tightly against the end stop and cannot be moved by the wind.
- An electric lock provides the system with additional protection against vandalism.
- In **double-leaf** systems, the two leaves are exactly flush with each other in the *CLOSE* end-of-travel position.

5.1 Single-leaf gate system

5.1.1 Fitting the end stops

5.1.2 Deactivating the integrated limit switch

The integrated limit switch must be deactivated before teaching in the end-of-travel positions via the mechanical end stops. Make sure that a wire jumper (to be provided on site) is connected at plug 5/6 instead of the BN/WH wires of the limit switch (see Figure **5.5b**).

5.1.3 Fitting and connecting the electric lock *

▶ See Figure **6**

The polarity does not have to be taken into account if connecting electric locks from the accessory list.

5.1.4 Preparations

▶ See Figures **8a/8a.1**

1. Uncouple leaf **A** and open approx. 1 m, re-couple leaf.
2. Set all DIL switches to **OFF**.
3. Connect the power supply.
4. DIL switch **1** to **ON** = **single-leaf** system
5. DIL switch **4** to **ON** = set-up mode
   - **a.** Green LED **GN** flashes = set-up mode
   - **b.** Red LED **RT** is illuminated

5.1.5 Teaching in the *CLOSE* end-of-travel position

▶ See Figure **8a.2**

1. Press and hold circuit board button **T**. Leaf **A** moves in the *CLOSE* direction, comes to a standstill at the end stop, and the motor switches off.
2. Release circuit board button **T**.
   The gate is now in the *CLOSE* end-of-travel position.
   The LED **RT** remains on after the end-of-travel position has been recorded.

NOTE:

If the gate moves in the *OPEN* direction, check the motor connection (see Figure **5.2**), if necessary, connect the motor correctly, perform a factory reset (see section 9.8) and repeat the steps described in this section.

5.1.6 Teaching in the *OPEN* end-of-travel position

▶ See Figure **8a.2**

1. Press and hold circuit board button **T** and move leaf **A** into the desired *OPEN* position. Release circuit board button **T**.
2. If the system overshoots the desired position, press circuit board button **T** again to move the leaf back a bit. The leaf can also be moved forward a bit by pressing circuit board button **T** again.
3. Once the desired end-of-travel position is reached, briefly press circuit board button **P**; the *OPEN* end-of-travel position has now been taught in. The LED **GN** briefly flashes quickly and then slowly.
4. DIL switch **4** to **OFF**
   - **a.** The connected safety equipment is activated.
   - **b.** Operation via radio is possible.
5. Use circuit board button **T** in press-and-release operation to trigger **three** complete gate cycles to teach in the forces (see section 7.1 and Figure **8a.3**).
   - **a.** The forces have been taught in if LED **GN** is illuminated.

⚠ WARNING

Danger of injuries due to faulty safety equipment

In the event of a malfunction, there is a danger of injuries due to faulty safety equipment.

- ▶ After the learning runs, the person commissioning the gate must check the function(s) of the safety equipment as well as the settings (see section 7.2).

The system is ready for operation only after this.

5.2 Double-leaf gate system

5.2.1 Fitting the end stops

5.2.2 Deactivating the integrated limit switches

The integrated limit switches must be deactivated before teaching in the end-of-travel positions via the mechanical end stops. Make sure that a wire jumper (to be provided on site) is connected at plug 5/6 instead of the BN/WH wires of the limit switch (see Figure **5.5b**).

* Accessory, not included as standard equipment!

5.2.3 Fitting and connecting electric locks *

▶ See Figure **6**

The polarity does not have to be taken into account if connecting electric locks from the accessory list.

5.2.4 Preparations

▶ See Figures **8b/8b.1**

1. Uncouple leaf **A** and open approx. 1 m, re-couple leaf.
2. Leaf **B** must be closed, otherwise uncouple leaf **B**, move it into the *CLOSE* position, and re-couple leaf.
3. Set all DIL switches to **OFF**.
4. Connect the power supply.
5. DIL switch **4** to **ON** = set-up mode
   - **a.** Green LED **GN** flashes = set-up mode
   - **b.** Red LED **RT** is illuminated

5.2.5 Teaching in the *CLOSE* end-of-travel position (leaf A):

▶ See Figure **8b.2**

1. Press and hold circuit board button **T**. Leaf **A** moves in the *CLOSE* direction, comes to a standstill at the end stop, and the motor switches off.
2. Release circuit board button **T**.
   The gate is now in the *CLOSE* end-of-travel position.
   The LED **RT** remains on after the end-of-travel position has been recorded.

NOTE:

If the gate moves in the *OPEN* direction, check the motor connection (see Figure **5.3**), if necessary, connect the motor correctly, perform a factory reset (see section 9.8) and repeat the steps described in this section.

5.2.6 Teaching in the *OPEN* end-of-travel position (leaf A)

▶ See Figure **8b.2**

1. Press and hold circuit board button **T** and move leaf **A** into the desired *OPEN* position. Release circuit board button **T**.
2. If the system overshoots the desired position, press circuit board button **T** again to move the leaf back a bit. The leaf can also be moved forward a bit by pressing circuit board button **T** again.
3. Once the desired end-of-travel position is reached, briefly press circuit board button **P**; the *OPEN* end-of-travel position has now been taught in. The LED **GN** briefly flashes quickly and then slowly.

5.2.7 Teaching in the *CLOSE* end-of-travel position (leaf B):

▶ See Figures **8b.3/8b.4**

1. Uncouple leaf **B** and open approx. 1 m, re-couple leaf.
2. DIL switch **3** to **ON** = Teach-in double leaf operation for leaf **B**.
3. Press and hold circuit board button **T**. Leaf **B** moves in the *CLOSE* direction, comes to a standstill at the end stop, and the motor switches off.
4. Release circuit board button **T**.
   The gate is now in the *CLOSE* end-of-travel position.
   The LED **RT** remains on after the end-of-travel position has been recorded.

NOTE:

If the gate moves in the *OPEN* direction, check the motor connection (see Figure **5.3**), if necessary, connect the motor correctly, perform a factory reset (see section 9.8) and repeat the steps described in this section.

5.2.8 Teaching in the *OPEN* end-of-travel position (leaf B)

▶ See Figure **8b.4**

1. Press and hold circuit board button **T** and move leaf **B** into the desired *OPEN* position. Release circuit board button **T**.
2. If the system overshoots the desired position, press circuit board button **T** again to move the leaf back a bit. The leaf can also be moved forward a bit by pressing circuit board button **T** again.
3. Once the desired end-of-travel position is reached, briefly press circuit board button **P**; the *OPEN* end-of-travel position has now been taught in. The LED **GN** briefly flashes quickly and then slowly.
4. Set DIL switch **3** to **OFF**.
5. Set DIL switch **4** to **OFF**.
   - **a.** The connected safety equipment is activated.
   - **b.** Operation via radio is possible.
6. Use circuit board button **T** in press-and-release operation to trigger **three** complete gate cycles to teach in the forces (see section 7.1 and Figure **8b.5**).
   - **a.** The forces have been taught in if LED **GN** is illuminated.
7. If necessary, set the leaf offset function (see section 5.2.9).

⚠ WARNING

Danger of injuries due to faulty safety equipment

In the event of a malfunction, there is a danger of injuries due to faulty safety equipment.

▶ After the learning runs, the person commissioning the gate must check the function(s) of the safety equipment as well as the settings (see section 7.2).

The system is ready for operation only after this.

5.2.9 With/without leaf offset and size of leaf offset

▶ See Figures **9.1/9.2**

In **double-leaf** gate systems with a threshold, the leaves may collide during travel. This is why the leaf offset must be activated after the teach-in process!

To ensure that the leaves do not collide during travel in a **double-leaf** gate system, a large leaf offset is expedient in asymmetrical gates with a threshold whereas a small leaf offset suffices for symmetrical gates with a threshold.

Setting the leaf offset function:

1. Set the leaf offset function with DIL switch **2**:02-en

2 ON	Without leaf offset: Leaf **A** and **B** open and close simultaneously.
2 OFF	With leaf offset: Leaf **A** opens before leaf **B**; leaf **B** closes before leaf **A**.

* Accessory, not included as standard equipment!

2. Set the size of the leaf offset with DIL switch **3**:

3 ON	Teach in leaf B/**small leaf offset**
3 OFF	Teach in leaf A/**large leaf offset**

6 Gate systems that open outwards

▶ See figure **16**

6.1 Connecting the operators

▶ See figures **16.2/16.3a/b**

Fit the operator cables to the **leaf A/leaf B** plug as shown in figure **16.2/16.3**.

6.2 Using end stops

We recommend using end stops, as the limit switch cannot be set over the entire spindle stroke. The integrated limit switch must be deactivated for this (see section 5.1.2).

6.3 Using limit switches

▶ See figure **16.1**

With gates that open outwards, the limit switch must be set in the direction of the operator motor, as the spindle has to retract in this case for the gate to move to the *CLOSE* end-of-travel position. Using a 3 mm Allen key, move the limit switch in the indicated direction as shown in figure **16.1**.

NOTE:

Do not use a cordless screwdriver to adjust. One rotation of the adjusting screw equals 1 mm on the spindle. The limit switch is not adjustable over the entire spindle stroke!

6.4 Teaching in the end-of-travel positions and forces

The end-of-travel positions are taught in as described in sections 5.1 / 5.2 and the forces as described in section 7.1.

7 Further Work

7.1 Force learning runs

Once the end-of-travel positions have been taught in or after specific changes, the forces must be taught in **again**. The gate must be closed and **two** uninterrupted gate cycles must take place, throughout which none of the safety equipment may be activated. Recording the forces takes place automatically by press-and-release operation in both directions, i.e. once an impulse has been given, the operator causes the gate to travel to the end-of-travel position. The LED **GN** flashes throughout. This LED is steadily illuminated once the force learning cycles have been completed (see figure **7a.5/7b.9/8a.3/8b.5**).

▶ **Both of the following procedures must be conducted two times.**

Learning the forces to the *OPEN* end-of-travel position:

▶ Press circuit board button **T** once.
The operator automatically moves into the *OPEN* end-of-travel position.

Learning the forces to the *CLOSE* end-of-travel position:

▶ Press circuit board button **T** once.
The operator automatically moves into the *CLOSE* end-of-travel position.

7.1.1 Setting the force limit

Due to special fitting situations, it can, however, happen that the previously taught-in forces are not high enough which can then lead to undesired reversing. In such cases, the force limit can be readjusted with a potentiometer, which is located on the circuit board and labelled with **Kraft F**.

⚠ WARNING

Force limit too high
If the force limit has been set too high, the gate will not stop on time when closing and may trap persons or objects.
▶ Do not set a force limit that is too high.

The increase in the force limit is a percentage increase in relation to the taught-in values; in the process, the setting of the potentiometer denotes the following force increase (see figure **10**):

Full left	+ 0% force
Centred	+15% force
Full right	+75% force

To adjust the force limit:

1. Adjust the potentiometer **Kraft F** in the desired direction.
2. The taught-in force setting must be checked using a suitable force measuring device to make sure that the values are permissible within the application scope of the European Standards EN 12453 and EN 12445 or the corresponding national regulations.
3. If the measured force is too high when the potentiometer setting for the force limit is 0%, it can be reduced via a lower travel speed for normal and slow speed (see section 7.4.7).

7.2 Connecting safety equipment *

▶ See figures **11.1/11.2**

A 2-wire photocell or monitored or unmonitored photocell can be connected to both the **SE1** and **SE2** safety circuits.
A photocell expander * is required to connect two photocells **(EL 31, EL 301)** to one safety circuit.

NOTE:

All safety devices should be connected step-by-step and tested.

7.2.1 SE1 safety device in the *OPEN* direction

SE1 safety device in the *OPEN* direction. If triggered, brief, delayed reversing in the *CLOSE* direction (see figure **11.1**)

Electrical connection

Terminal **20**	0 V (power supply)
Terminal **18**	Test signal output
Terminal **73**	SE1 switch signal input
Terminal **5**	+24 V (power supply)

* Accessory, not included as standard equipment!

Function selection via the DIL switches

5 ON	**6 ON**	2-wire photocell
5 ON	**6 OFF**	Monitored photocell
5 OFF	**6 OFF**	• Unmonitored photocell • No safety device: wire jumper between terminals 20/73, = delivery condition

7.2.2 SE2 safety device in the *CLOSE* direction

SE2 safety device in the *CLOSE* direction. If triggered, delayed, long reversing up to the *OPEN* end-of-travel position (see figure **11.2**)

Electrical connection

Terminal **20**	0 V (power supply)
Terminal **18**	Test signal output
Terminal **72**	SE2 switch signal input
Terminal **5**	+24 V (power supply)

Function selection via the DIL switches

7 ON	**8 ON**	2-wire photocell
7 ON	**8 OFF**	Monitored photocell
7 OFF	**8 OFF**	• Unmonitored photocell • No safety device: wire jumper between terminals 20/72, = delivery condition

7.2.3 SE2 safety device in the *CLOSE* direction as a through-traffic photocell

Additional function for the SE2 safety device in the *CLOSE* direction as a safety/through-traffic photocell (only with a monitored photocell, see figure **11.2c/11.2e**)

Function selection via the DIL switches

9 ON	• Monitored photocell or 2-wire photocell as a safety device in the *CLOSE* direction. • Additional through-traffic photocell function: If the photocell is tripped, the hold-open phase will be restarted after it has elapsed and will be shortened after passage
9 OFF	Photocell as a safety device in the *CLOSE* direction. If the photocell is tripped, the hold-open phase will be restarted after it has elapsed and the set hold-open phase will start to elapse after passage.

NOTE:

Automatic timed closing can only be activated if at least one safety device has been activated.

7.3 Connecting additional components/accessories

NOTE:

Loading of the 24 volt supply for the operator by all accessories: max. 100 mA.

7.3.1 Connecting a warning lamp *

▶ See figure **11.3a**

A warning lamp (e.g. for warnings before and during gate travel) or *CLOSE* limit switch reporting can be connected to the volt-free contacts on the *Option* terminal. The voltage to operate the 24 V lamp (max. 7 W) can be tapped from the control (terminal 24 V =).

NOTE:

A 230 V warning lamp must have an external supply (see figure **11.3b**).

7.3.2 Connecting external buttons *

▶ See figure **11.4**

One or more buttons with normally open contacts (volt-free or switching to 0 V), e.g. key switches, can be connected in parallel, max. cable length 40 m (in a cable system separated from the 230 V cables).

Single-leaf gate system

Impulse control:

▶ First contact to terminal **21**
▶ Second contact to terminal **20**

Double-leaf gate system

Impulse control travel command for traffic leaf (A):

▶ First contact to terminal **23**
▶ Second contact to terminal **20**

Impulse control travel command for traffic leaf (A) and fixed leaf (B):

▶ First contact to terminal **21**
▶ Second contact to terminal **20**

NOTE:

If auxiliary voltage is needed for external command units, then a voltage of +24 V DC is available for this at terminal **5** (against terminal **20** = 0 V).

7.3.3 Connecting a cut-out to stop and/or switch off the operator (STOP or emergency-OFF circuit) *

▶ See figure **11.5**

This switch immediately stops gate travel and prevents further gate travel.

A cut-out with normally closed contacts (switching to 0 V or volt-free) is connected as follows:

1. Remove the wire jumper inserted at the factory between terminal **12** (STOP or emergency-OFF input) and terminal **13** (0 V).
2. Connect switching output or first contact at terminal **12** (STOP or emergency-OFF input).
3. Connect 0 V (ground) or second contact with terminal **13** (0 V).

7.3.4 Connecting a universal adapter print UAP 1 *

▶ See figure **11.6**

The universal adapter print UAP 1 can be used:

- For choosing a direction (Open/Close) and a second opening height via external command units
- For *OPEN* and *CLOSE* limit switch reporting
- For the option relay

* Accessory, not included as standard equipment!

7.3.5 Connecting the emergency battery *

▶ See figure **11.7**

An emergency battery can be connected to this terminal to temporarily supply the operator during a power failure.

⚠ WARNING

Danger of injury due to unexpected gate travel

Unexpected gate travel can result when the emergency battery is still connected despite the mains plug being pulled out.

▶ Pull out the mains plug **and** the plug of the emergency battery when performing all work on the gate system.

7.4 Setting additional functions via the DIL switches

The control is programmed via the DIL switches.

Before initial start-up, the DIL switches are in factory settings, i.e. the switches are in the OFF position (see figure **5.1**). Changes to the DIL switch settings are only permissible under the following conditions:

- The operator is at rest.
- The warning or hold-open phase is not active.
- The LED **GN** does not flash.

Set the DIL switches as described below in accordance with the national regulations, the desired safety equipment and the on-site conditions.

The following DIL switches must be set:

7.4.1 DIL switch 10/11: automatic timed closing/ pre-warning time/option relay

The functions of the operator (automatic timed closing/5 s pre-warning time) and the function of the option relay are set with DIL switch **10** in combination with DIL switch **11**.

NOTE:

Automatic timed closing can only be activated if at least one safety device has been activated.

▶ See figure **12.1**

10 OFF	11 OFF	**Operator** No special function
		Option relay Relay picks up in the *CLOSE* end-of-travel position

▶ See figure **12.2**

10 ON	11 OFF	**Operator** Warning phase for every gate travel without automatic timed closing
		Option relay Relay clocks rapidly during the pre-warning time and normally during the travel phase

▶ See figure **12.3**

10 OFF	11 ON	**Operator** Automatic timed closing, pre-warning time only for automatic timed closing
		Option relay Relay clocks rapidly during the pre-warning time, normally during the travel phase and is OFF during the hold-open phase.

▶ See figure **12.4**

10 ON	11 ON	**Operator** Automatic timed closing, pre-warning time for each gate movement
		Option relay Relay clocks rapidly during the pre-warning time, normally during the travel phase and is OFF during the hold-open phase.

NOTE:

Automatic timed closing is only possible from the *OPEN* end-of-travel position. If the force limit is tripped during closing, the gate briefly reverses in the *OPEN* direction and stops. If the photocell is tripped during closing, the gate reverses into the *OPEN* end-of-travel position and automatic timed closing is started again.

7.4.2 Hold-open phase setting

▶ See figure **12.5**

The *OPEN* hold-open phase until the gate automatically closes can be set in 5 stages.

Setting the hold-open phase:

1. Set DIL switch **12** to **ON**.

12 ON	Setting the hold-open phase
12 OFF	Without function

2. Briefly press circuit board button **P** to **decrease** the hold-open phase.

   or

   Briefly press circuit board button **T** to **increase** the hold-open phase.

   When setting the hold-open phase, the LED **RT** displays the following settings:

LED RT	Hold-open phase in seconds
1× flashing/ break	30
2× flashing/ break	60
3× flashing/ break	90
4× flashing/ break	120
5× flashing/ break	180

* Accessory, not included as standard equipment!

3. Set DIL switch **12** back to **OFF** to save the set hold-open phase.

7.4.3 Impulse during the hold-open phase

▶ See figure **12.6**

Here you can set how the system should respond if a control impulse occurs during the hold-open phase.

13 ON	• Impulse cancels the hold-open phase • Impulse during gate travel stops the gate
13 OFF	Impulse extends the hold-open phase

7.4.4 Reversal limit

▶ See figure **12.7**

If a safety device is activated, gate travel is triggered in the opposite direction (reverse cycle) up to the reversal limit (max. 50 mm) shortly before the *CLOSE* end-of-travel position.
If this limit is passed, no reversal occurs to ensure that the gate reaches the end-of-travel position without disrupting travel.

During operation in the *CLOSE* direction with a mechanical end stop, the system must distinguish between two possibilities: whether the gate contacts the end stop (leaf stops) or an obstruction (leaf reverses direction).

When setting for a **double-leaf** system, make sure that the selected leaf can travel freely, depending on the threshold.

The limit range can be adjusted in 8 steps.

Setting the reversal limit:

1. Set DIL switch **14** to **ON**.

14 ON	Set reversal limit
14 OFF	Without function

2. Only select the leaf with DIL switch **3** in **double-leaf** gate systems:

3 ON	**Leaf B**/small leaf offset
3 OFF	**Leaf A**/large leaf offset

3. Briefly press circuit board button **P** to **reduce** the reversal limit.
   or
   Briefly press circuit board button **T** to **increase** the reversal limit.
   During the procedure to set the reversal limit, the LED **GN** indicates the following:

LED GN	Reversal limit
1× flashing/ break	Minimum value
2× -3× flashing/ break	Intermediate value
4× flashing/ break	Average value
5× -7× flashing/ break	Intermediate value
8× flashing/ break	Maximum value

4. Only select leaf B with DIL switch **3** in **double-leaf** gate systems and repeat step 3 for the other leaf.
5. Set DIL switch **14** back to **OFF** to store the set reversal limit(s).
6. Reset DIL switch **3** in accordance with the previously selected leaf offset (see section 4.2.11 / 5.2.9).

7.4.5 Changing the starting points for slow speed (soft stop) when opening and closing

The following prerequisites must be fulfilled before changing the starting points for slow speed when opening and closing:

- The end-of-travel positions must be set.
- The gate must be in the *CLOSE* end-of-travel position.
- DIL switch **4** *Set-up mode* must be **OFF**.

Without leaf offset:
DIL switch **2** to **ON** = leaf A and leaf B open and close simultaneously

Setting the starting points for single-leaf systems:

▶ See figure **12.8**

1. Set DIL switch **15** to **ON**.

15 ON	Set the desired starting points
15 OFF	Without function

2. Press circuit board button **T**.
   The gate leaf will travel normally in press-and-release operation in the *OPEN* direction.
3. When the gate passes the required position for the start of slow speed, briefly press circuit board button **P**.
   The gate leaf will move at slow speed for the remaining distance until in the *OPEN* end-of-travel position.
4. Press circuit board button **T**.
   The gate leaf will travel normally in press-and-release operation in the *CLOSE* direction.
5. When the gate passes the required position for the start of slow speed, briefly press circuit board button **P**.
   The gate leaf will move at slow speed for the remaining distance until in the *CLOSE* end-of-travel position.
6. Set DIL switch **15** to **OFF**.
7. The LED **GN** flashes to indicate that you must perform two consecutive force learning runs (see section 7.1).

Setting the starting points for double-leaf systems:

▶ See figure **12.8**

1. Set DIL switch **15** to **ON**.

15 ON	Set the desired starting points
15 OFF	Without function

2. Press circuit board button **T**.
   First gate leaf A (traffic leaf) and then gate leaf B move normally in press-and-release operation in the *OPEN* direction.
3. When gate leaf A passes the required position for the start of slow speed, briefly press circuit board button **P**.
4. When gate leaf B passes the required position for the start of slow speed, briefly press circuit board button **P**. Both gate leaves move at slow speed for the remaining distance until in the *OPEN* end-of-travel position.
5. Press circuit board button **T**.
   First gate leaf B and then gate leaf A move normally in press-and-release operation in the *CLOSE* direction.
6. When gate leaf B passes the required position for the start of slow speed, briefly press circuit board button **P**.
7. When gate leaf A passes the required position for the start of slow speed, briefly press circuit board button **P**. Both gate leaves move at slow speed for the remaining distance until in the *CLOSE* end-of-travel position.
8. Set DIL switch **15** to **OFF**.
9. The LED **GN** flashes to indicate that you must perform two consecutive force learning runs (see section 7.1).

NOTE:

Changing the starting points for slow speed deletes the already taught-in forces. After the changes have been made, the LED **GN** flashes to signal that the forces must be taught in again.

Resetting the starting points for slow speed (soft stop) to the factory setting:

▶ Set DIL switch **16** to **ON** and then to **OFF**.

16 ON	Slow travel speed for all runs/delete slow speed starting points
16 OFF	Without function

7.4.6 Setting the slow speed:

The **Speed V** potentiometer can be used to set the slow speed in a range of 30-60% of the normal speed.

Setting the slow speed:

▶ See figure **12.8a**

1. Set DIL switch **4** to **ON**.

4 ON	Set-up mode
4 OFF	Normal mode in press-and-release operation

2. Change the **Speed V** potentiometer as needed.

Full left	30% speed
Centred	45% speed
Full right	60% speed

3. Set DIL switch **4** to **OFF**.
   The set value will be taken over.

7.4.7 Slow travel speed

If the measured force is too high when the potentiometer setting for the force limit is 0%, it can be reduced via a lower travel speed for normal and slow speed.

To reduce the travel speed:

1. Set DIL switch **16** to **ON**.

16 ON	Slow travel speed for all runs/delete slow speed starting points
16 OFF	Normal travel speed for all runs

2. Perform three successive force learning runs (see section 7.1).
3. Check the force again with a force measuring device.

8 Radio

8.1 Important information for using the hand transmitter

⚠ WARNING

Danger of injury during gate travel

Persons may be injured by gate travel if the hand transmitter is actuated.

- ▶ Make sure that the hand transmitters are kept away from children and can only be used by people who have been instructed on how the remote-control gate functions!
- ▶ If the gate has only one safety feature, only operate the hand transmitter if you are within sight of the gate!
- ▶ Only drive or pass through remote control gate systems if the gate is in the *OPEN* end-of-travel position!
- ▶ Please note that unwanted gate cycles may occur if a hand transmitter button is accidentally pressed (e.g. if stored in a pocket/ handbag).

⚠ CAUTION

Danger of injuries due to unintended gate travel

Unintended gate travel may occur while teaching in the radio system.

- ▶ Pay attention that no persons or objects are in the gate's travel range when teaching in the radio system.

ATTENTION

Functional disturbances caused by environmental conditions

These conditions can impair function!
Protect the hand transmitter from the following conditions:

- Direct sunlight (perm. ambient temperature: -20°C to +60°C)
- Moisture
- Dust

NOTES:

- Perform a functional check after programming or extending the remote control system.
- Only use original components for the initial start-up or for extending the remote control system.
- Local conditions may affect the range of the radio system. Moreover, when used at the same time, GSM 900 mobile phones can affect the range.

8.2 External receiver

Plug-in the external radio receiver on the respective connector (see **Figure 11.8**). The function “impulse” (*Open – Stop – Close – Stop*) and the function “traffic leaf” can be programmed on the external radio receiver.

9 Operation

⚠ WARNING

Danger of injury during gate travel

If people or objects are in the area around the gate while the gate is in motion, this can lead to injuries or damage.

- ▶ Children are not allowed to play near the gate system.
- ▶ Make sure that no persons or objects are in the gate's travel range.
- ▶ Make sure that no persons or objects are located between the gate and the operator mechanics.
- ▶ If the gate has only one safety feature, only operate the gate operator if you are within sight of the gate's area of travel.
- ▶ Monitor the gate travel until the gate has reached the end-of-travel position.
- ▶ Only drive or pass through remote control gate systems if the gate is in the *OPEN* end-of-travel position!

Function tests

- ▶ Check the function of the mechanical release **monthly**.

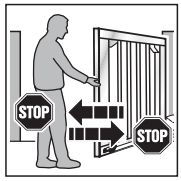

- ▶ To check the safety reversal, stop the gate with both hands while it is closing.
  The gate system must stop and initiate a safety reversal.
- ▶ In the event of a failure of the safety reversal, a specialist must be commissioned immediately for the inspection and repair work.

9.1 Instructing users

- ▶ Instruct all persons who use the gate system on the proper and safe use of the hinged gate operator.
- ▶ Demonstrate and test the mechanical release as well as the safety return.

9.2 Normal operation

- ▶ Press circuit board button **T**, the external button or activate impulse **1**.
  The gate moves in impulse sequence mode (*OPEN*/*STOP*/*CLOSE*/*STOP*).
  If impulse **2** is activated, leaf A (traffic leaf) will open if it was previously closed (see figures **11.4/11.8**). If the leaf offset is activated, leaf A can only move if leaf B is in the *CLOSE* end-of-travel position.

9.3 Reversing during an opening run

If the force limit or photocell is activated during an opening run, the respective leaf will briefly reverse in the *CLOSE* direction, i.e. the operator moves the gate in the opposite direction and then stops. With a **double-leaf** gate, the uninvolved leaf stops.

9.4 Reversing during a closing run

If the force limit or photocell is activated during a closing run, the respective leaf will briefly reverse in the *OPEN* direction and then stop. If the photocell is activated, a long reversal until the *OPEN* end-of-travel position will take place. During impulse operation, the gate remains at a standstill and the time starts again for automatic timed closing.

9.5 Behaviour during a power failure (without emergency battery)

To be able to open or close the hinged gate during a power failure, it must be disengaged from the operator (see figure **15.1**). If the gate is also secured with an electric lock, the lock must be unlocked with the appropriate key beforehand.

9.6 Behaviour following a power failure (without emergency battery)

- ▶ Once the power supply has been restored, the gate must be reengaged with the operator (see figure **15.2**)

A necessary reference run in the *CLOSE* direction is automatically performed during the next command impulse following a power failure. During this reference run the option relay clocks and a connected warning lamp flashes slowly.

9.7 Disengaging without a power failure

After reengaging the gate, the voltage supply must be disconnected once so that a new reference run is automatically performed in the *CLOSE* direction.

9.8 Factory reset

This can be used to reset the taught-in end-of-travel positions and forces.

To perform a factory reset:

1. Set DIL switch **4** to **ON**.

4 ON	Set-up mode
4 OFF	Normal mode in press-and-release operation

2. **Immediately** press circuit board button **P** briefly.
3. When the LED **RT** flashes rapidly, **quickly** set DIL switch **4** to **OFF**.
4. The control has now been reset to the factory settings. The LED **GN** will flash slowly.

9.9 Operation, error and warning messages

9.9.1 LED GN

The green LED **GN** (see figure **5.1**) indicates the operating conditions of the control:

Steady illumination Normal state, all *OPEN* end-of-travel positions and forces are taught in.
Fast flashing Force learning runs must be performed.
Slow flashing End-of-travel positions must be taught in.

Setting up the reversal limits: • Number of flashes/break is dependent on the selected reversal limit • Minimum reversal limit = 1x flashing/break • Maximum reversal limit = 8x flashing/break (see section 7.4.4)

9.9.2 LED RT

The red LED **RT** (figure **5.1**) indicates:

In set-up mode: • Limit switch for the selected leaf not actuated = LED is on • Limit switch for the selected leaf actuated = LED is off
Setting the hold-open phase: • Number of flashes/break is dependent on the selected hold-open phase • Minimum hold-open phase = 1x flashing/break • Maximum hold-open phase = 5x flashing/break (see section 7.4.2)
Display of the button inputs: • Actuated = LED is on • Not actuated = LED is off

Error/diagnosis display

The LED **RT** helps to easily identify causes when operation does not go according to plan.

LED RT	**Flashes 2x**
Error/Warning	SE safety/protective device has responded
Possible cause	• Safety/protective device has been actuated • Safety/protective device defective • Without the SE, jumper between terminals 20 and 72/73 missing
Remedy	• Check safety/protective device • Check whether the appropriate wire jumpers are present without the connected safety/protective device
LED RT	**Flashes 3x**
Error/Warning	Force limit in *CLOSE* direction
Possible cause	Obstruction in gate area
Remedy	Remove obstruction, check forces, and increase, if necessary
LED RT	**Flashes 4x**
Error/Warning	Hold or static current circuit is open, operator at a standstill
Possible cause	• Normally closed contact at terminal 12/13 is open • Electric circuit interrupted
Remedy	• Close contact • Check electric circuit
LED RT	**Flashes 5x**
Error/Warning	Force limit in *OPEN* direction
Possible cause	Obstruction in gate area
Remedy	Remove obstruction, check forces, and increase, if necessary
LED RT	**Flashes 6x**
Error/Warning	System error
Possible cause	Internal error
Remedy	Restore the factory setting (see section 9.8) and teach in the control again or exchange, if necessary

9.10 Error acknowledgement

Acknowledge the error after the cause of the error has been eliminated:

▶ Press the internal or external button or actuate the radio hand transmitter.
The error is deleted and the gate travels in the corresponding direction.

10 Inspection and Maintenance

The gate operator is maintenance-free.

In the interest of your own safety, we recommend having the gate system inspected and maintained by a qualified person in accordance with the manufacturer's specifications.

⚠ WARNING

Danger of injury due to unexpected gate travel

Unexpected gate travel can result during inspection and maintenance work if the gate system is inadvertently actuated by other persons.

▶ Disconnect the mains plug **and**, if applicable, the plug of the emergency battery when performing all work on the gate system.

▶ Safeguard the gate system against being switched on again without authorisation.

An inspection or necessary repairs may only be carried out by a qualified person. Contact your supplier for this purpose.

A visual inspection may be carried out by the operator.

▶ Check all safety and protective functions **monthly.**

▶ Malfunctions and/or defects at hand must be rectified **immediately**.

▶ We would like to point out that any repairs not carried out properly or with due professionalism shall render the warranty null and void.

11 Optional Accessories

Optional accessories are not included in the scope of delivery.

Loading of the operator by all electrical accessories:
max. 100 mA.

The following accessories are available:

- External radio receivers
- External impulse buttons (e.g. key switch)
- External code and transponder switches
- One-way photocell
- Warning lamps/warning lights
- Universal adapter print UAP 1 for limit switch reporting and direction command inputs
- Emergency battery HNA Outdoor
- Electric lock for post locking
- Electric lock for floor locking
- Photocell expanders
- Spray-water protected junction box
- Stop plate
- Special fittings

12 Dismantling and Disposal

NOTE:

When disassembling, observe the applicable regulations regarding occupational safety.

Have a specialist dismantle the gate operator in the reverse order of these instructions and dispose of it properly.

13 Warranty Conditions

Warranty

We shall be exempt from our warranty obligations and product liability in the event that the customer carries out his own structural alterations or undertakes improper installation work or arranges for same to be carried out by others without our prior approval and contrary to the fitting guidelines we have provided. Moreover, we shall accept no responsibility for the inadvertent or negligent use of the operator and the accessories nor for improper maintenance of the gate and its counterbalance. Batteries and light bulbs are also not covered by the warranty.

Warranty period

In addition to the statutory warranty provided by the dealer in the sales contract, we grant the following warranty for parts from the date of purchase:

- 24 months for the operator mechanics, motor and motor control
- 24 months on radio equipment, accessories and special systems

There is no warranty on consumables (e.g. fuses, batteries, lamps). Claims made under the warranty do not extend the warranty period. For replacement parts and repairs the warranty period is six months or at least the remainder of the warranty period.

Prerequisites

A claim under this warranty is only valid for the country in which the equipment was bought. The product must have been purchased through our authorised distribution channels. A claim under this warranty exists only for damage to the object of the contract itself. Reimbursement of expenditure for dismantling and fitting, testing of corresponding parts, as well as demands for lost profits and compensation for damages, are excluded from the warranty.

The receipt of purchase substantiates your right to claim under the warranty.

13.1 Performance

For the duration of the warranty we shall eliminate any product defects that are proven to be attributable to a material or manufacturing fault. We pledge to replace free of charge and at our discretion the defective goods with non-defective goods, to carry out repairs, or to grant a price reduction.

Damages caused by the following are excluded:

- improper fitting and connection
- improper initial start-up and operation
- external factors such as fire, water, abnormal environmental conditions
- mechanical damage caused by accidents, falls, impacts
- negligent or intentional destruction
- normal wear or deficient maintenance
- repairs conducted by unqualified persons
- use of non-original parts
- removal or defacing of the data label

Replaced parts become our property.

14 Excerpt from the Declaration of Incorporation

(as defined in EC Machinery Directive 2006/42/EC for incorporation of partly completed machinery according to annex II, part B)

The product described on the rear side has been developed, constructed and produced in accordance with the:

- EC Machinery Directive 2006/42 EC
- EC Construction Products Directive 89/106/EEC
- EC Low-Voltage Directive 2006/95/EC
- EC Electromagnetic Compatibility Directive 2004/108/EC

Applied and consulted standards:

- EN ISO 13849-1, PL "c" Cat. 2
  Safety of machinery – Safety-related parts of control systems – Part 1: General principles
- EN 60335-1/2, when applicable
  Safety of electrical appliances/Operators for doors
- EN 61000-6-3
  Electromagnetic compatibility – Electromagnetic radiation
- EN 61000-6-2
  Electromagnetic compatibility – Interference immunity

Partly completed machinery as defined in the EC Directive 2006/42/EC is only intended to be incorporated into or assembled with other machinery or other partly completed machinery or equipment, thereby forming machinery to which this Directive applies.

This is why this product must only be put into operation after it has been determined that the entire machine/system in which it will be installed corresponds with the guidelines of the EC Directive mentioned above.

15 Technical Data

Max. gate leaf width	2.500 mm/4.000 mm depending on operator type
Max. gate height	2,000 mm
Max. gate weight	220 kg/400 kg depending on operator type
Max. gate leaf infill	Dependent on the gate surface. Regional wind loads must be taken into account if using gate infills (EN 13241-1).
Rated load	See data label
Max. pull and push force	See data label
Max. spindle speed	Approx. 16 mm/s
Gate locking	Electric lock for post and floor locking, recommended: • From a leaf width ≥ 1.500 mm • With partial infill • With increased wind load
Operator release	On operator, with eye bolt
Operator housing	Zinc diecast and/or plastic
Mains voltage	Rated voltage 230 V/50 Hz, power input approx. 0.15 kW
Control	Microprocessor control system, programmable via 16 DIL switches, control voltage 24 V DC, protection category IP 65
Max. control/operator cable length	40 m
Operating mode	S2, short-time duty 4 minutes
Temperature range	–20°C to +60°C
Travel/force limit	Electronic
Automatic safety cut-out	Force limit for both operational directions, self-programming and testing
Hold-open phase for automatic timed closing	Adjustable between 30 – 180 s (photocell required)
Motor	Spindle unit with 24 V DC motor and worm gear, protection category IP 44

16 Overview of DIL Switch Functions

DIL 1	Single or double-leaf operation	
ON	Single-leaf operation	
OFF	Double-leaf operation	

DIL 2	With/without leaf offset (only with double-leaf operation)	
ON	Without leaf offset: leaf A and B open and close simultaneously	
OFF	With leaf offset: leaf A opens before leaf B and leaf B closes before leaf A	

DIL 3	Leaf selection/size of leaf offset	
ON	Teach in leaf B/small leaf offset	
OFF	Teach in leaf A/large leaf offset	

DIL 4	Normal operation/Set-up mode	
ON	Set-up mode	
OFF	Normal mode in press-and-release operation	

DIL 5	DIL 6	Safety device SE1 in *OPEN* direction (connection at terminal 73)	
ON	ON	2-wire photocell	
ON	OFF	Monitored photocell	
OFF	OFF	• No safety device: wire jumper between terminals 20/73, = delivery condition • Unmonitored photocell **(EWLS AP4, EWLS AP6)**	

DIL 7	DIL 8	Safety device SE2 in *CLOSE* direction (connection at terminal 72)	
ON	ON	2-wire photocell	
ON	OFF	Monitored photocell	
OFF	OFF	• No safety device: wire jumper between terminals 20/72, = delivery condition • Unmonitored photocell **(EWLS AP4, EWLS AP6)**	

DIL 9	Safety device SE2 in *CLOSE* direction (connection at terminal 72) as a through-traffic photocell	
ON	Safety photocell activated as a through-traffic photocell	
OFF	Safety photocell not activated as a through-traffic photocell	

DIL 10	DIL 11	Operator function	Option relay function	
ON	ON	Automatic timed closing, pre-warning time for each leaf movement	Relay clocks rapidly during the pre-warning time, normally during the travel phase and is OFF during the hold-open phase	
OFF	ON	Automatic timed closing, pre-warning time only for automatic timed closing	Relay clocks rapidly during the pre-warning time, normally during the travel phase and is OFF during the hold-open phase	
ON	OFF	No automatic timed closing, pre-warning time for each leaf movement	Relay clocks rapidly during the pre-warning time, normally during the travel phase	
OFF	OFF	No special function	Relay picks up in the *CLOSE* end-of-travel position	

DIL 12	Hold-open phase setting	
ON	Set hold-open phase	
OFF	Without function	

DIL 13	Impulse during the hold-open phase	
ON	• Impulse cancels the hold-open phase • Impulse during gate travel stops the gate	
OFF	Impulse extends the hold-open phase	

DIL 14	Reversal limit	
ON	Set reversal limit	
OFF	Without function	

DIL 15	Starting point for slow speed	
ON	Set the desired starting points	
OFF	Without function	

DIL 16	Slow travel speed for all runs/delete slow speed starting points	
ON	Slow travel speed for all runs/delete slow speed starting points	
OFF	Without function	

1

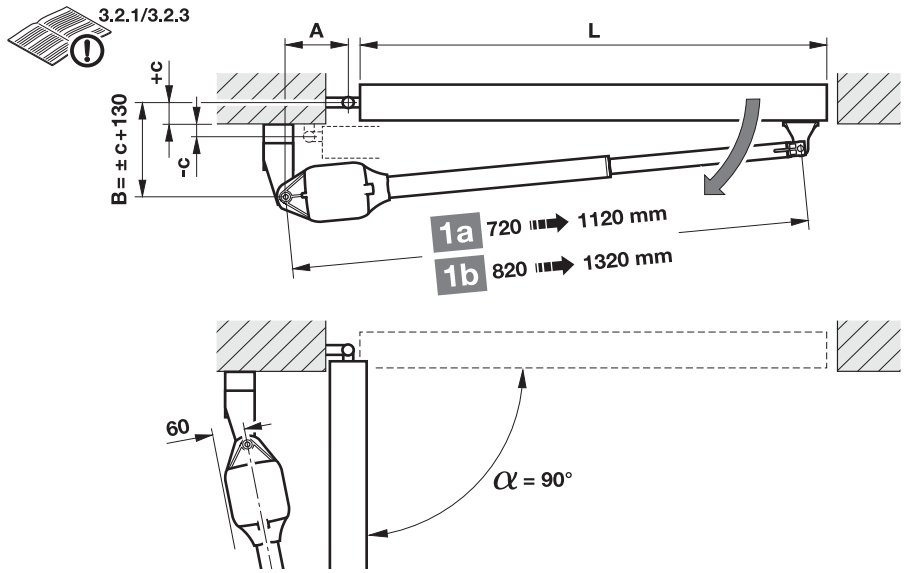

1a L = 1000 ➡ 2500 mm, c = -30 ➡ +150 mm

3.2.1

B [mm]	c [mm]	A [mm]								
		100	110	120	130	140	150	160	170	180
100	-30	95°	100°	105°	110°	115°	118°	120°	122°	125°
120	-10	95°	100°	105°	108°	112°	115°	117°	120°	122°
140	10	95°	100°	103°	105°	108°	112°	115°	118°	120°
160	30	95°	98°	100°	102°	105°	108°	112°	115°	110°
180	50	93°	96°	98°	100°	103°	105°	108°	103°	98°
200	70	93°	96°	98°	100°	103°	105°	100°	95°	92°
220	90	93°	95°	97°	99°	102°	97°	93°	90°	–
240	110	93°	95°	97°	99°	94°	90°	–	–	–
260	130	92°	94°	90°	–	–	–	–	–	–
280	150	90°	–	–	–	–	–	–	–	–

1b L = 1500 ➡ 4000 mm, c = -30 ➡ +210 mm

3.2.1

B [mm]	c [mm]	A [mm]								
		100	110	120	130	140	150	160	170	180
100	-30	95°	100°	105°	110°	115°	118°	120°	122°	125°
120	-10	95°	100°	105°	108°	112°	115°	117°	120°	122°
140	10	95°	100°	103°	105°	108°	112°	115°	118°	120°
160	30	95°	98°	100°	102°	105°	108°	112°	115°	117°
180	50	93°	96°	98°	100°	103°	105°	108°	112°	114°
200	70	93°	96°	98°	100°	103°	105°	107°	110°	112°
220	90	93°	95°	97°	99°	102°	104°	107°	108°	110°
240	110	93°	95°	97°	99°	101°	103°	106°	106°	108°
260	130	92°	94°	97°	99°	100°	102°	105°	105°	105°
280	150	90°	94°	96°	98°	100°	102°	103°	96°	94°
300	170	90°	94°	96°	97°	99°	97°	93°	90°	–
320	190	90°	93°	95°	93°	92°	–	–	–	–
340	210	90°	93°	90°	–	–	–	–	–	–

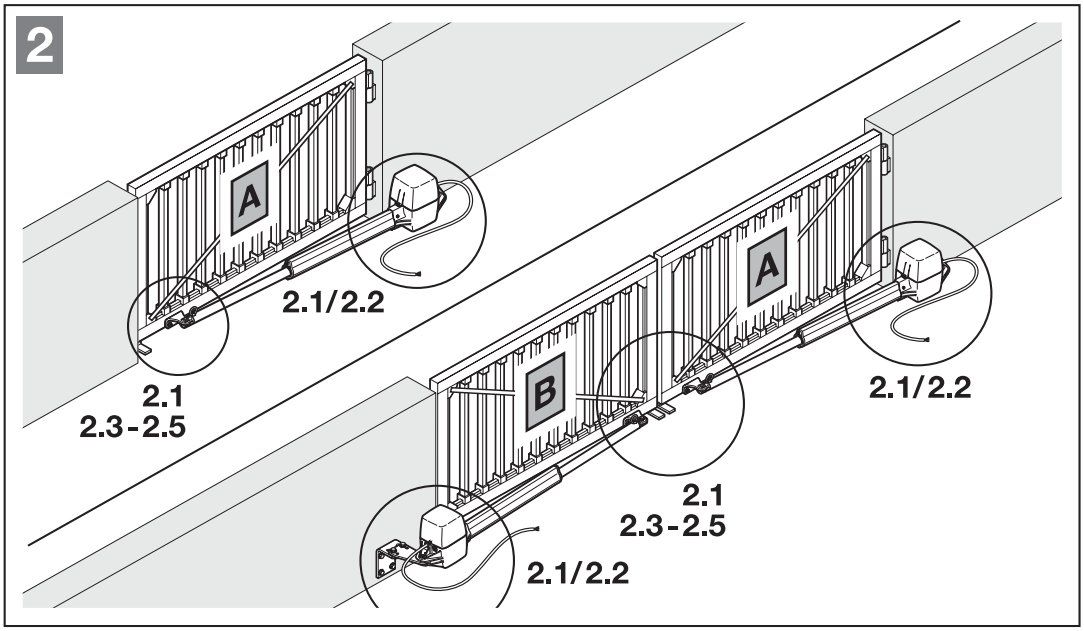
2
A
2.1/2.2
2.1
2.3-2.5
B
A
2.1/2.2
2.1
2.3-2.5
2.1/2.2

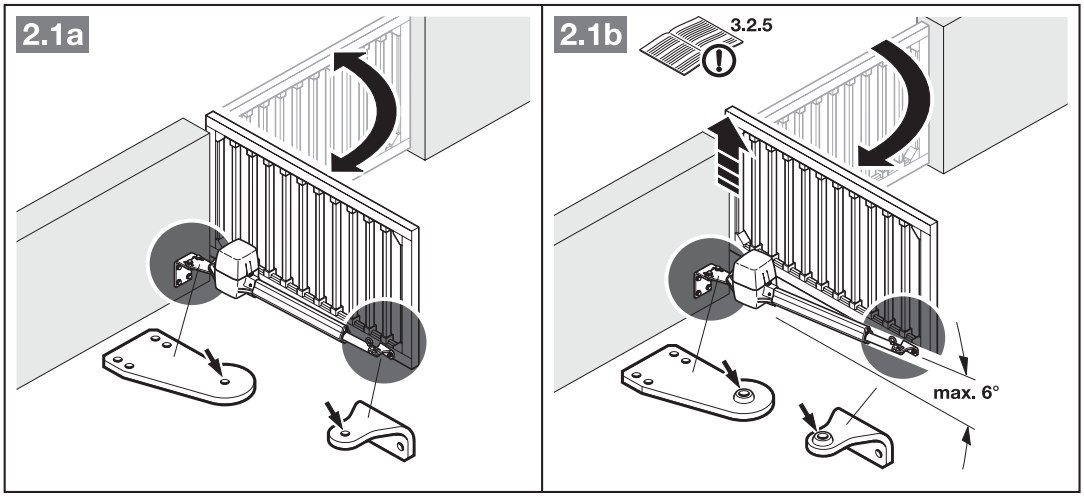
2.1a
2.1b
3.2.5
max. 6°

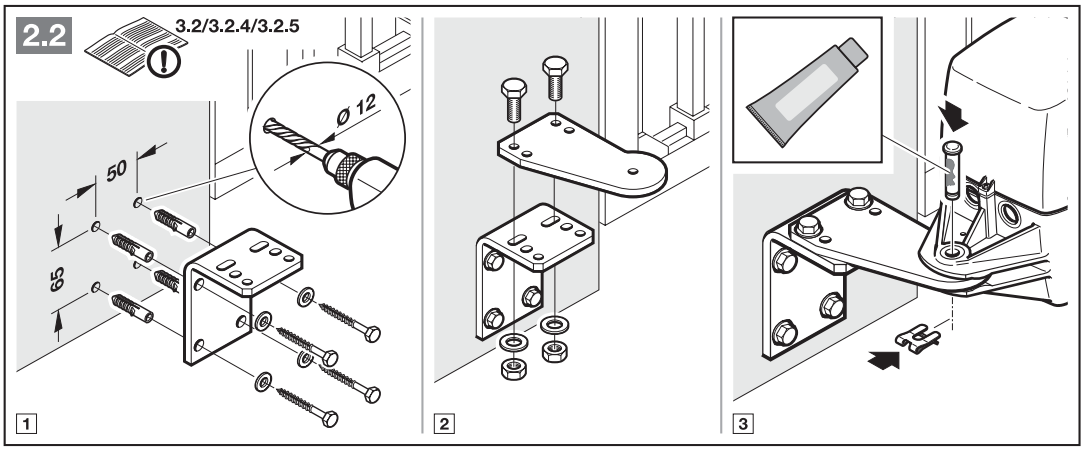
2.2
3.2/3.2.4/3.2.5
Ø 12
50
65
1
2
3

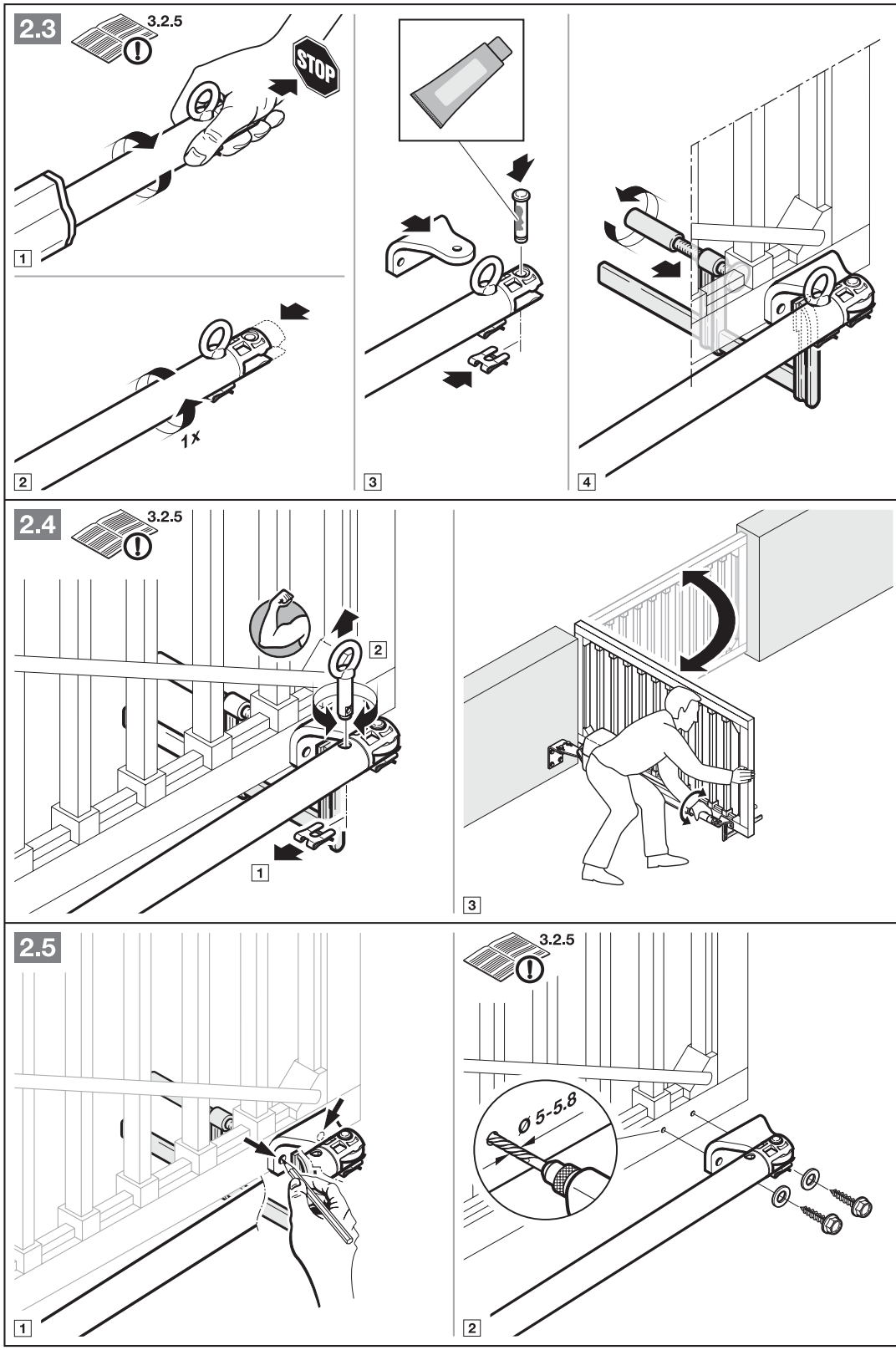
2.3
3.2.5
STOP
1
1x
2
3
4
2.4
3.2.5
2
1
3
2.5
1
3.2.5
Ø 5-5.8
2

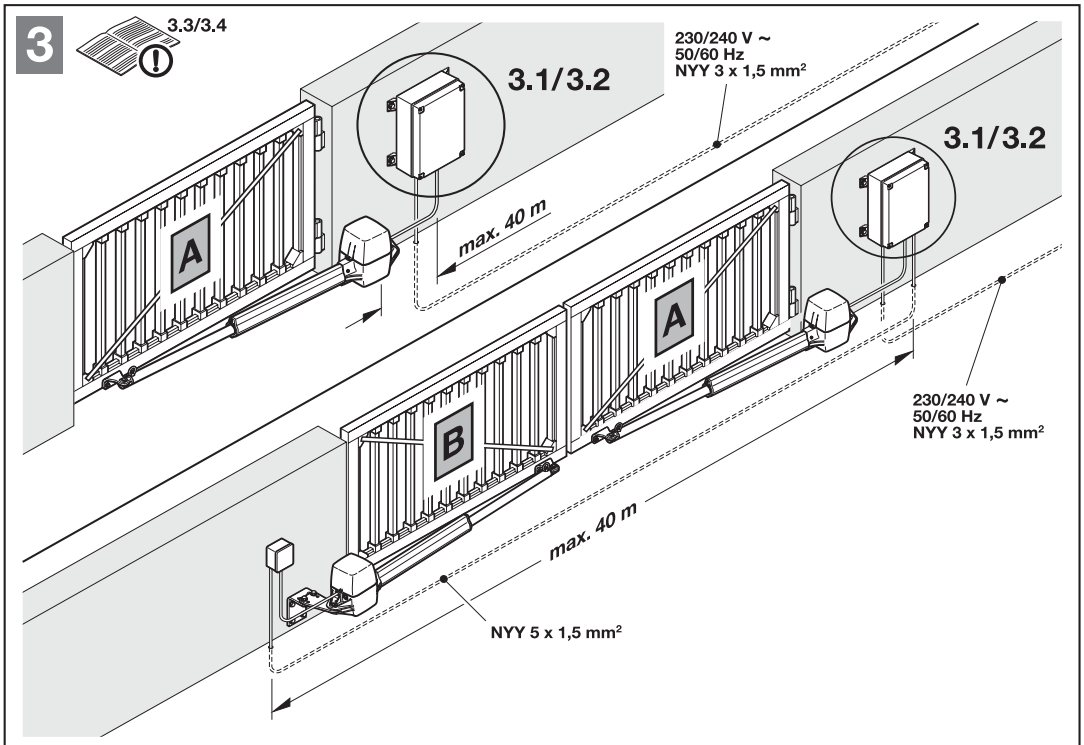
3
3.3/3.4
3.1/3.2
230/240 V ~
50/60 Hz
NYY 3 x 1,5 mm²
3.1/3.2
A
max. 40 m
A
B
230/240 V ~
50/60 Hz
NYY 3 x 1,5 mm²
max. 40 m
NYY 5 x 1,5 mm²

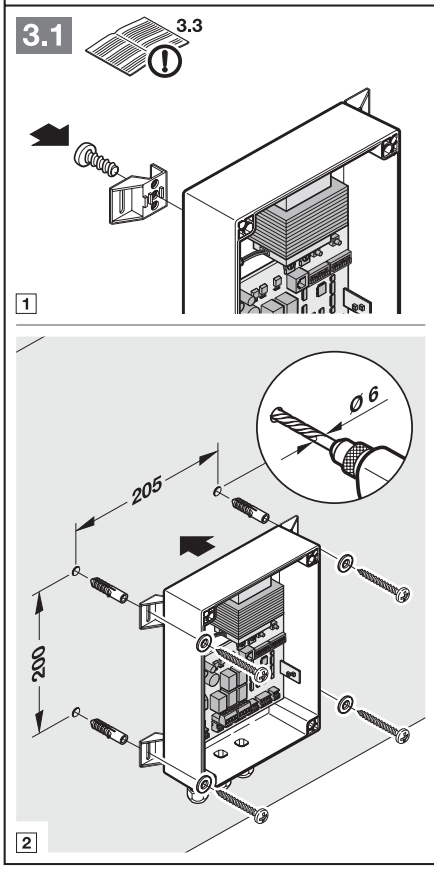
3.1
3.3
1
Ø 6
205
200
2

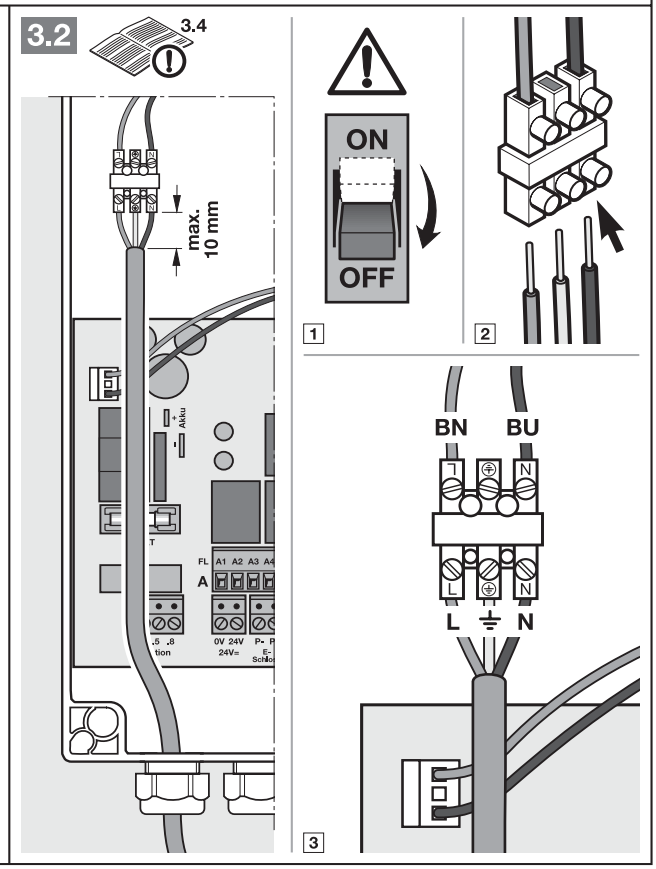
3.2
3.4
max.
10 mm
ON
OFF
1
2
BN
BU
L
N
3

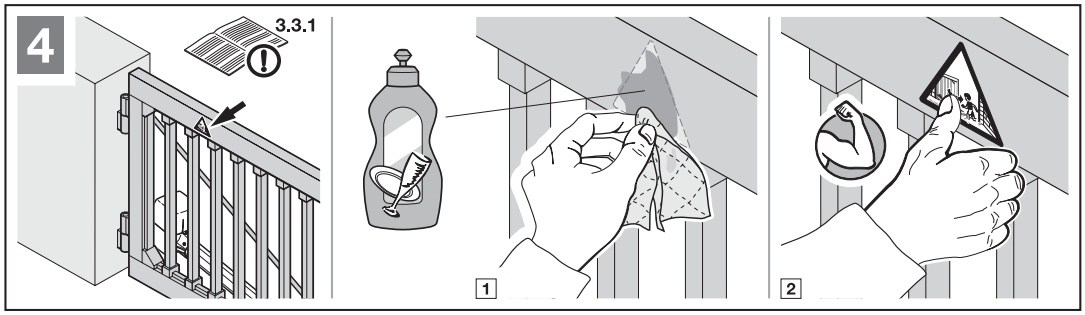
4
3.3.1
1
2

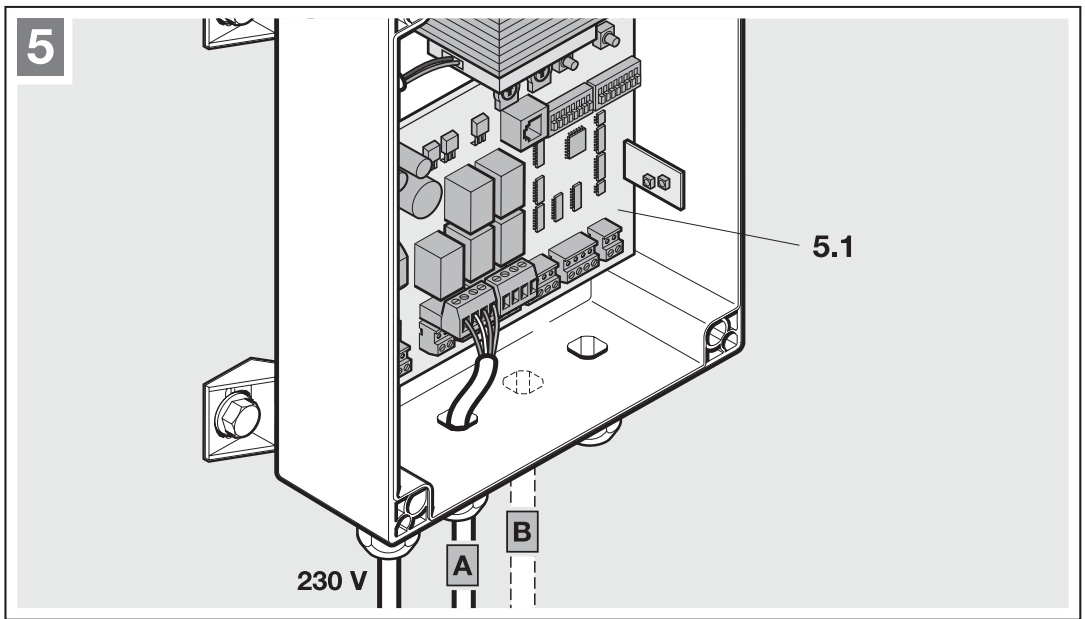
5
5.1
B
A
230 V

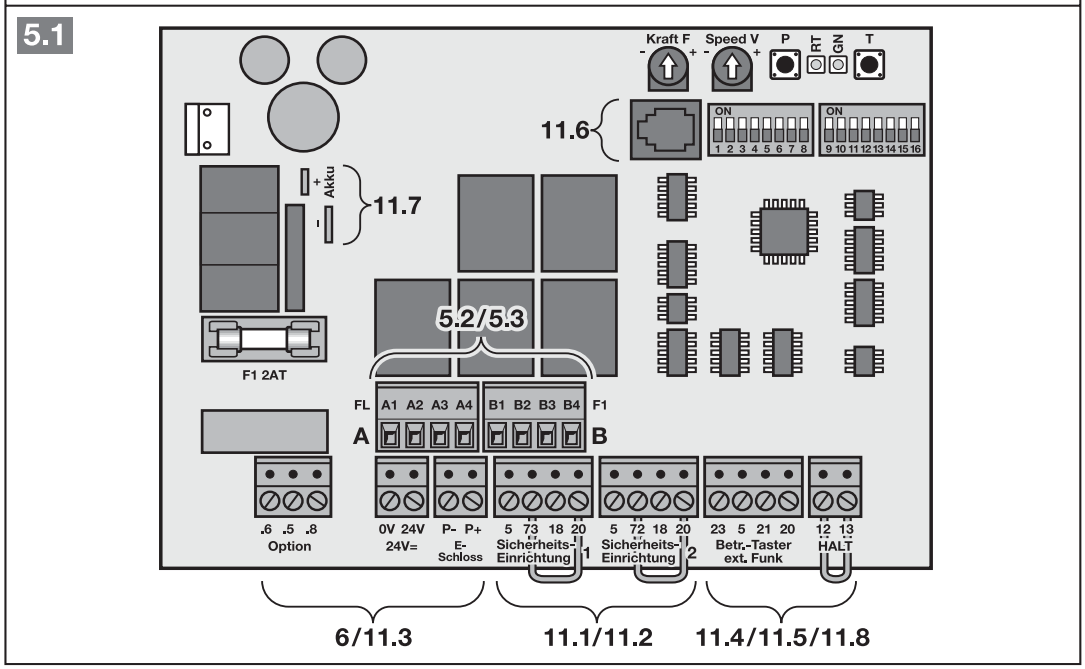
5.1
Kraft F
Speed V
P
RT
GN
T
11.6
ON
1 2 3 4 5 6 7 8
9 10 11 12 13 14 15 16
Akku
11.7
5.2/5.3
F1 2AT
FL A1 A2 A3 A4 B1 B2 B3 B4 F1
A
B
.6 .5 .8
Option
0V 24V
24V=
P- P+
E-Schloss
5 73 18 20
Sicherheits-Einrichtung 1
5 72 18 20
Sicherheits-Einrichtung 2
23 5 21 20
Betr.-Taster ext. Funk
12 13
HALT
6/11.3
11.1/11.2
11.4/11.5/11.8

5.2 3.5.1

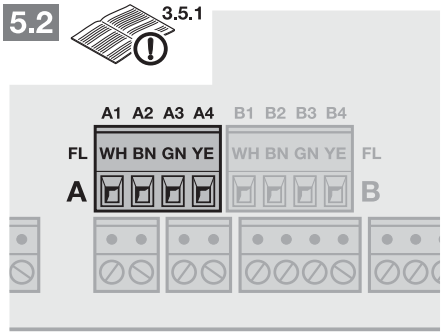

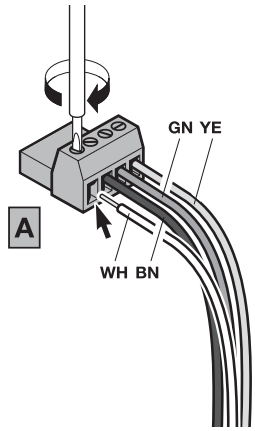

1

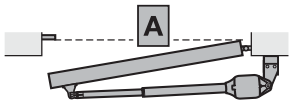

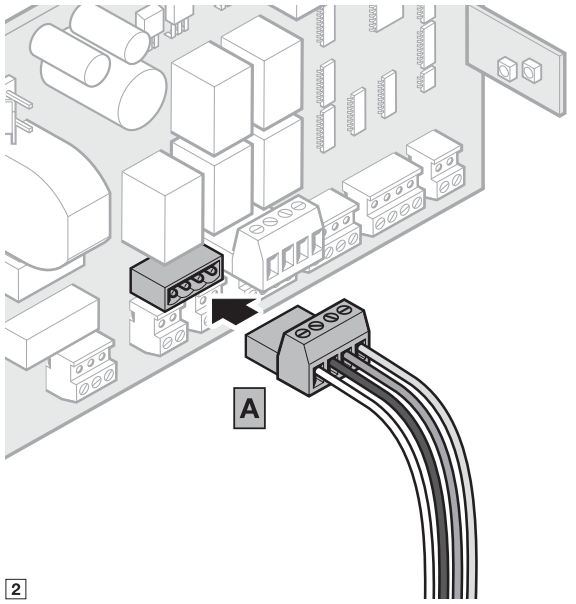

2

5.3 3.5.2/3.5.3

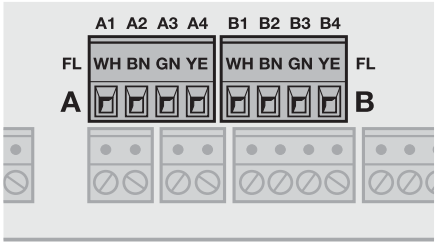

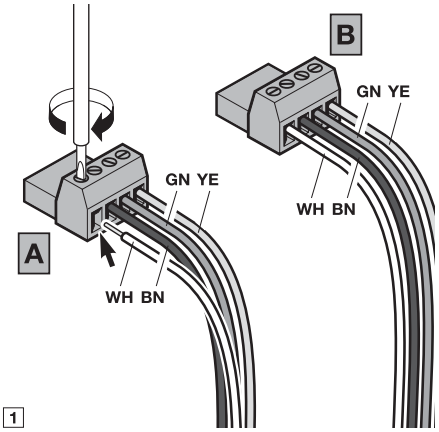

1

5.3a 3.5.2

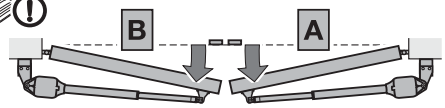

5.3b 3.5.3

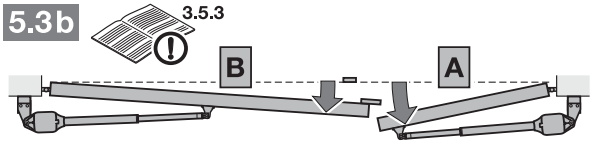

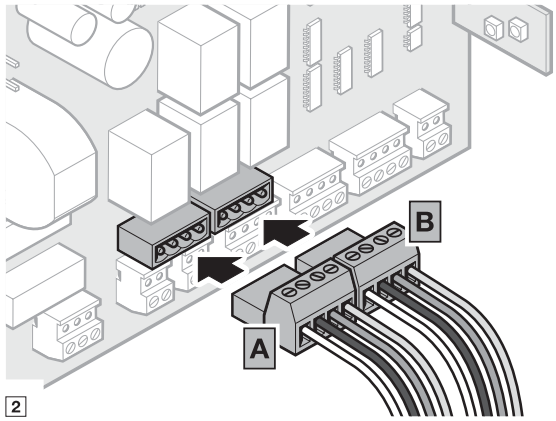

2

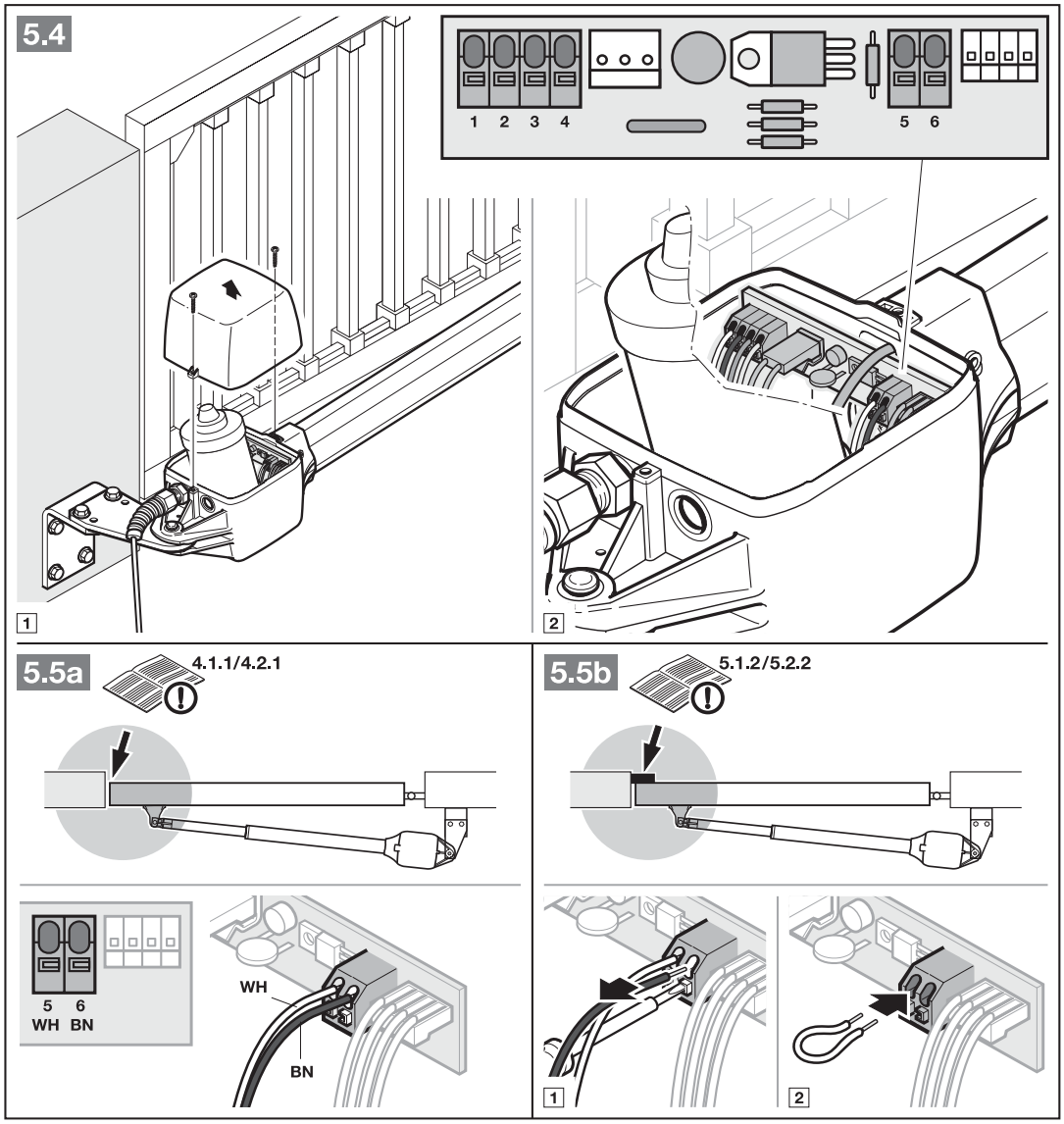
5.4
1 2 3 4
5 6
1
2
5.5a
4.1.1/4.2.1
5 6
WH BN
WH
BN
5.5b
5.1.2/5.2.2
1
2

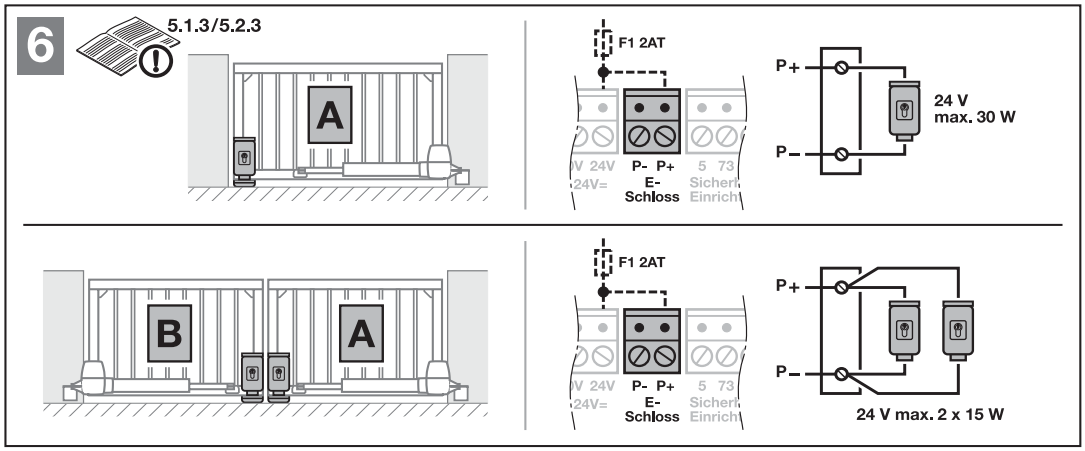
6
5.1.3/5.2.3
A
B
A
F1 2AT
V 24V
24V=
P- P+
E-
Schloss
5 73
Sicherh.
Einricht.
P+
P-
24 V
max. 30 W
F1 2AT
V 24V
24V=
P- P+
E-
Schloss
5 73
Sicherh.
Einricht.
P+
P-
24 V max. 2 x 15 W

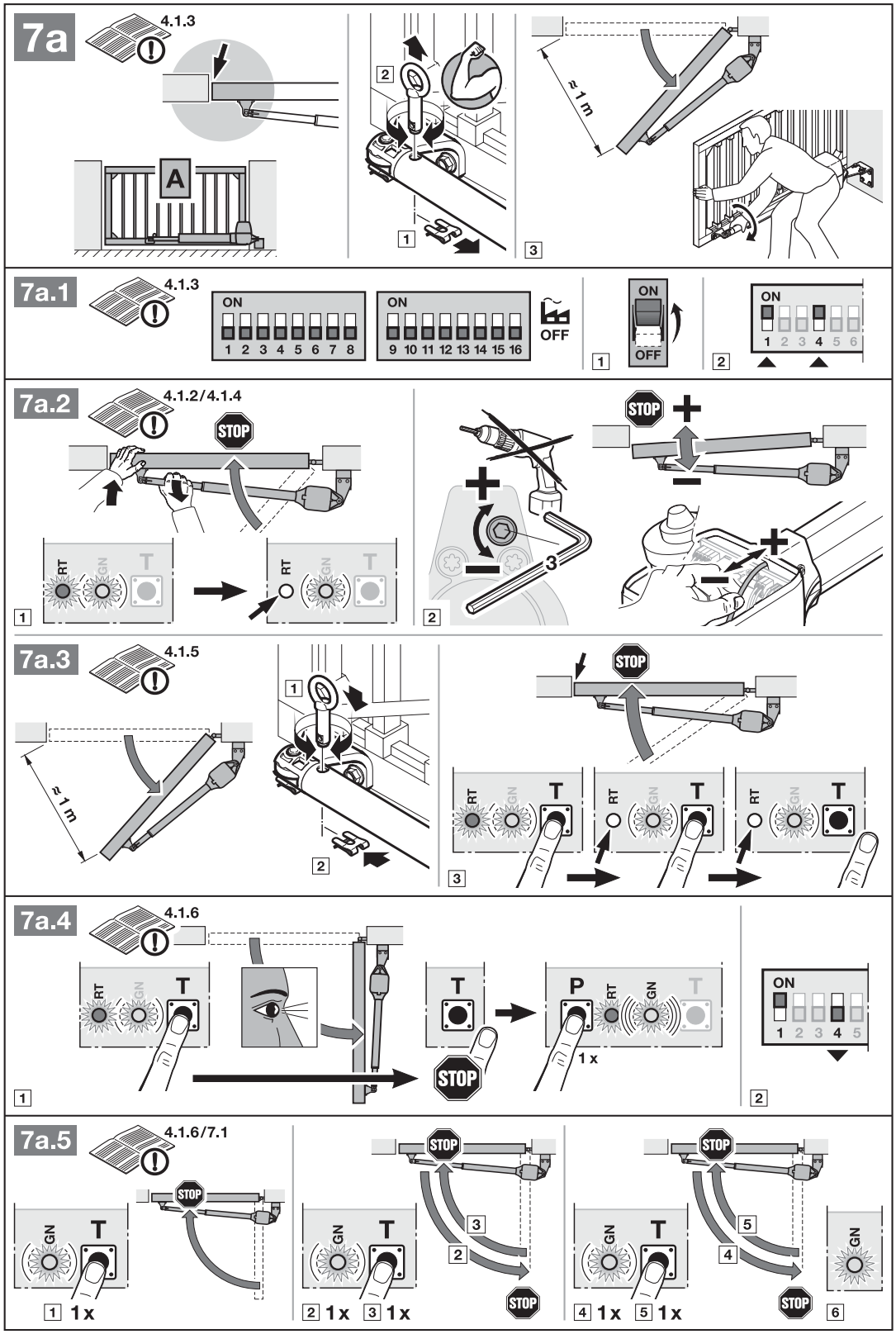
7a
4.1.3
A
≈ 1 m
7a.1
4.1.3
ON
1 2 3 4 5 6 7 8
ON
9 10 11 12 13 14 15 16
OFF
ON
OFF
ON
1 2 3 4 5 6
7a.2
4.1.2/4.1.4
STOP
RT
GN
T
3
7a.3
4.1.5
≈ 1 m
STOP
7a.4
4.1.6
P
1 x
ON
1 2 3 4 5
7a.5
4.1.6/7.1
STOP
1 1x
2 1x
3 1x
4 1x
5 1x
6

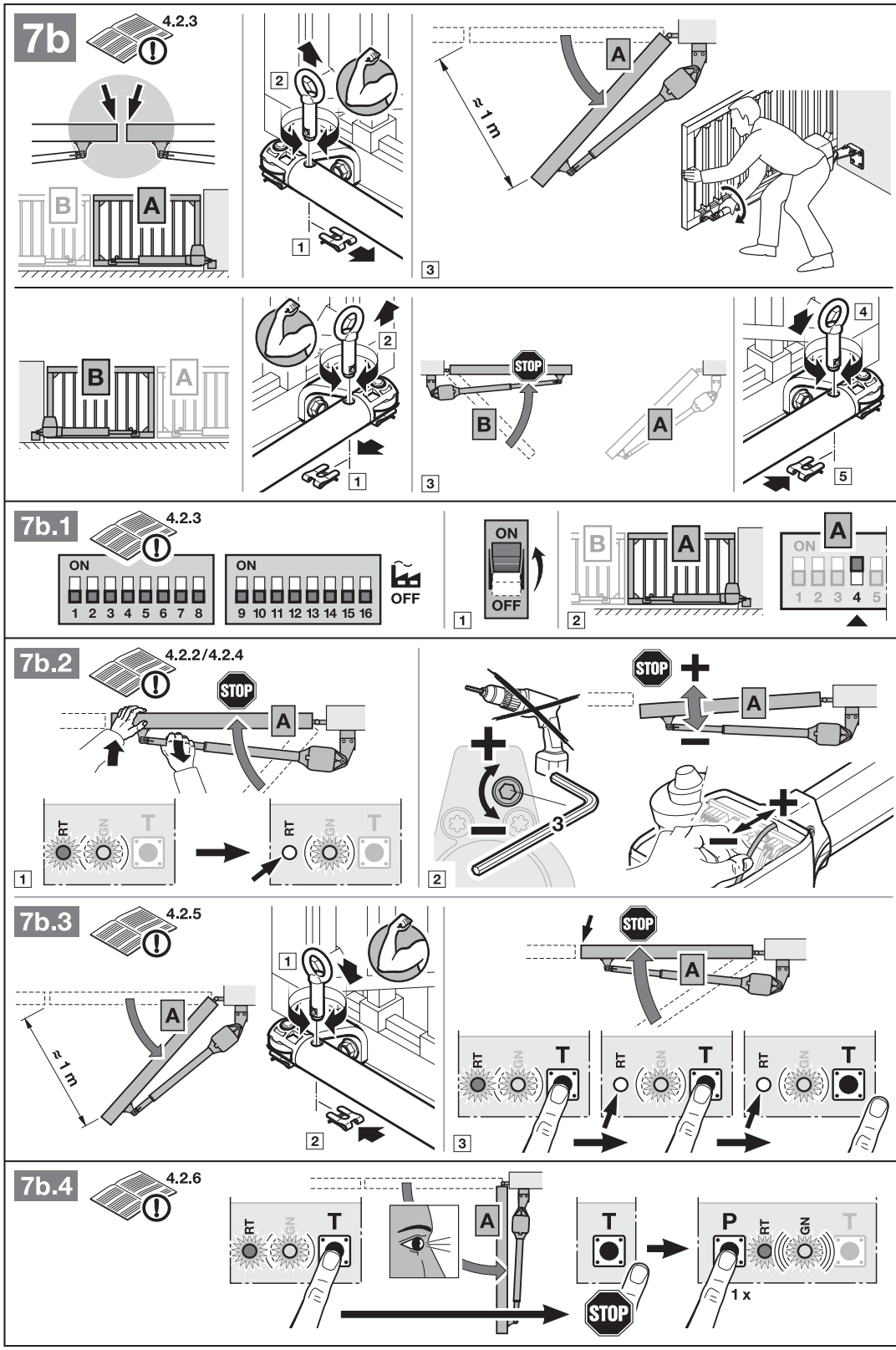
7b
4.2.3
B
A
2
1
≈ 1 m
3
7b.1
4.2.3
ON
1 2 3 4 5 6 7 8
9 10 11 12 13 14 15 16
OFF
4
5
STOP
7b.2
4.2.2/4.2.4
RT
GN
T
7b.3
4.2.5
7b.4
4.2.6
P
1 x

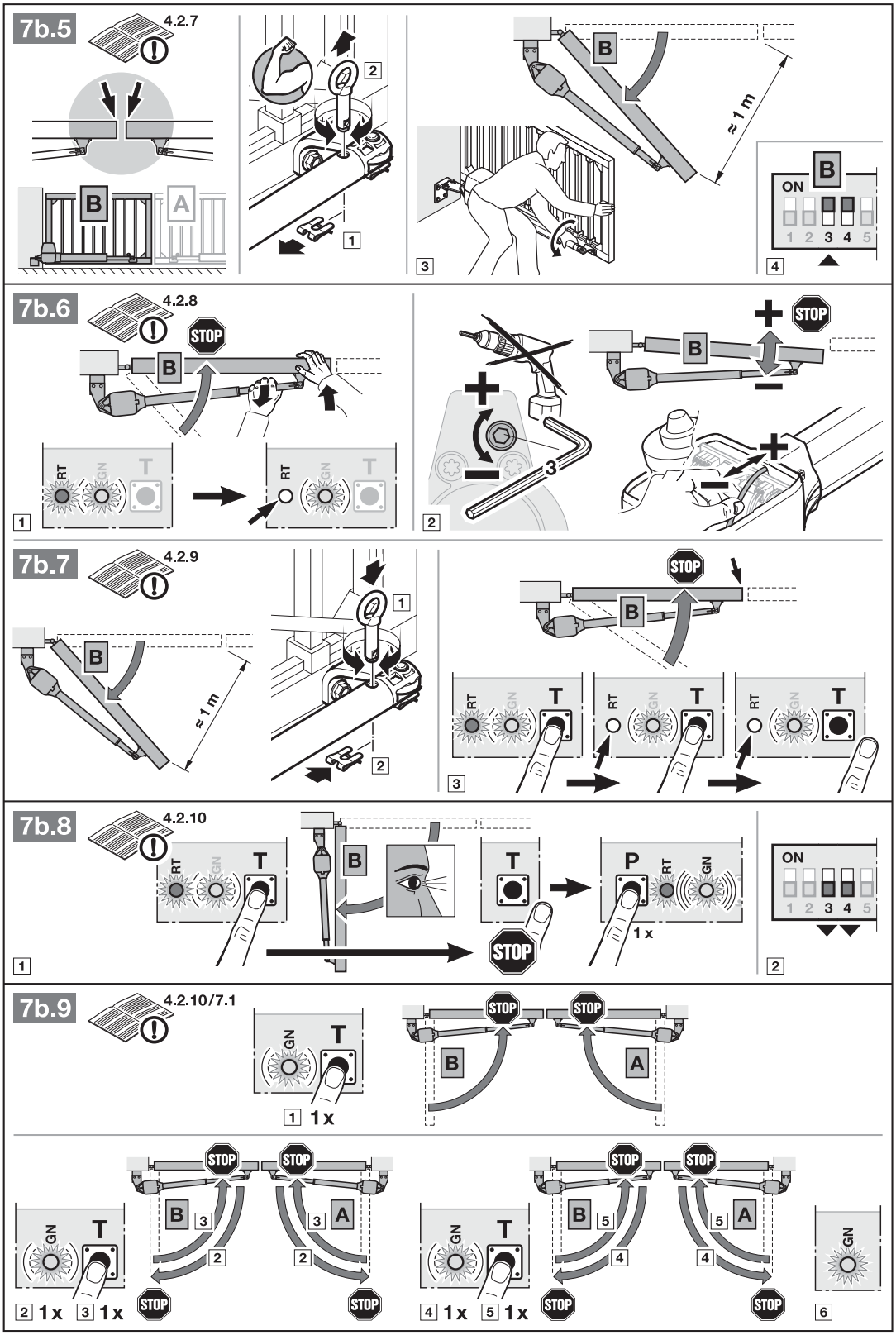
7b.5
4.2.7
B
A
1
2
3
≈ 1 m
ON
1 2 3 4 5
4
7b.6
4.2.8
STOP
B
RT
GN
T
1
2
3
7b.7
4.2.9
≈ 1 m
1
2
3
7b.8
4.2.10
P
1 x
ON
1 2 3 4 5
1
2
7b.9
4.2.10/7.1
1 1x
2 1x
3 1x
4 1x
5 1x
6

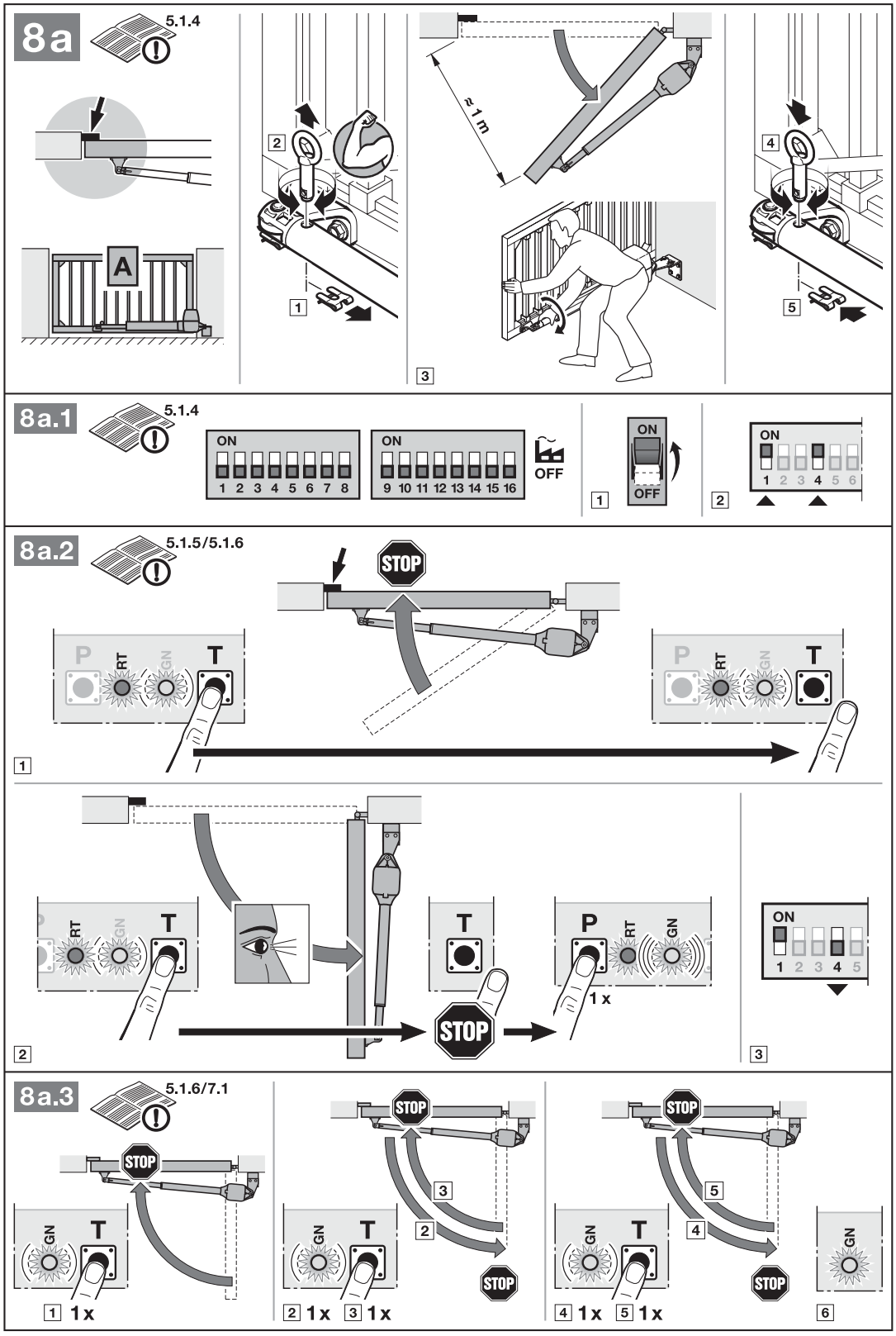
8a
5.1.4
A
1
2
≈ 1 m
3
4
5
8a.1
5.1.4
ON
1 2 3 4 5 6 7 8
ON
9 10 11 12 13 14 15 16
OFF
1
ON
OFF
2
ON
1 2 3 4 5 6
8a.2
5.1.5/5.1.6
STOP
P
RT
GN
T
1
2
1 x
3
ON
1 2 3 4 5
8a.3
5.1.6/7.1
STOP
GN
T
1 1x
2 1x
3 1x
4 1x
5 1x
6

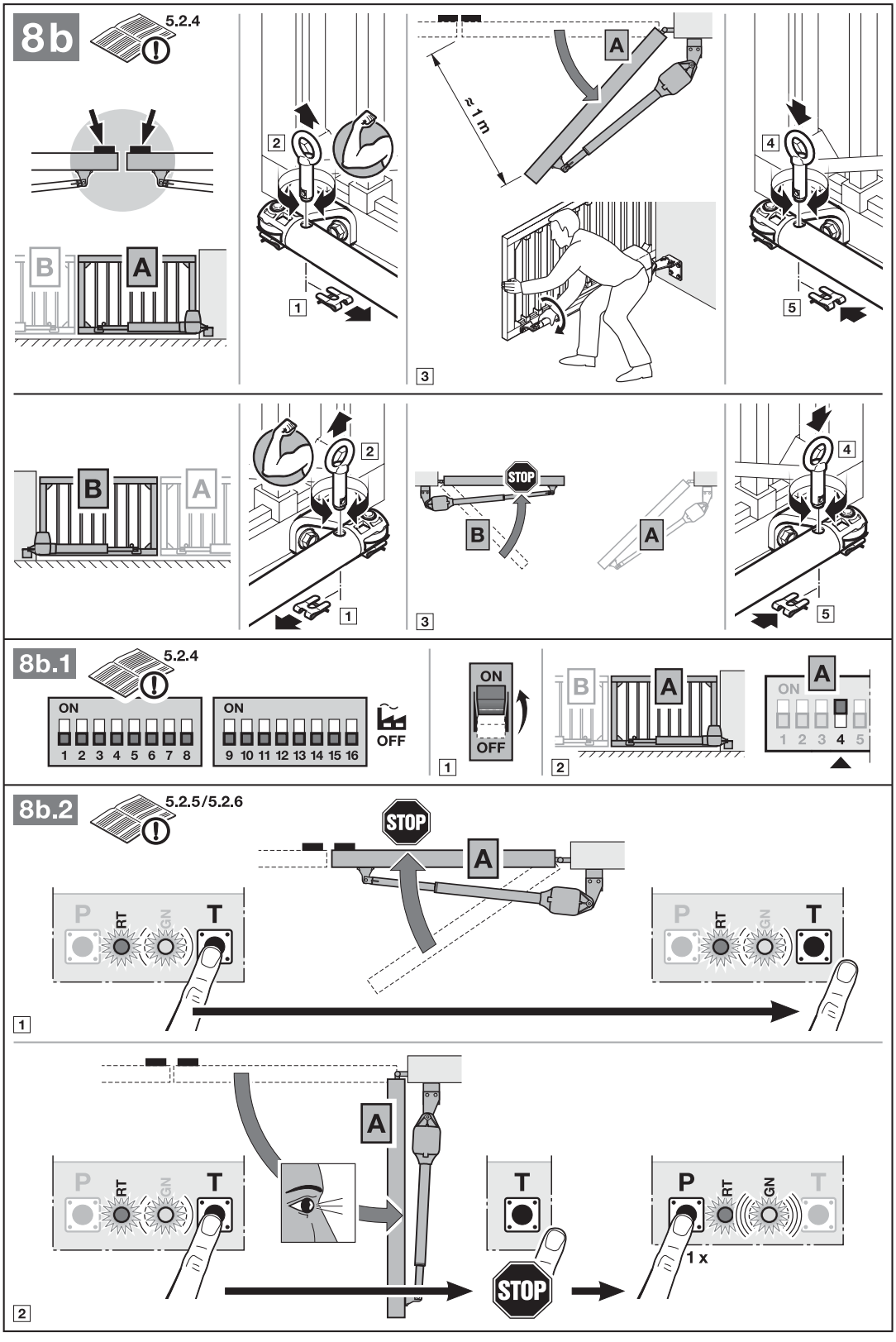
8b
5.2.4
B
A
2
1
≈ 1 m
A
3
4
5
B
A
2
1
B
STOP
A
3
4
5
8b.1
5.2.4
ON
1 2 3 4 5 6 7 8
ON
9 10 11 12 13 14 15 16
OFF
1
ON
OFF
2
B
A
A
ON
1 2 3 4 5
8b.2
5.2.5/5.2.6
STOP
A
P
RT
GN
T
1
A
P
RT
GN
T
T
STOP
P
RT
GN
T
1 x
2

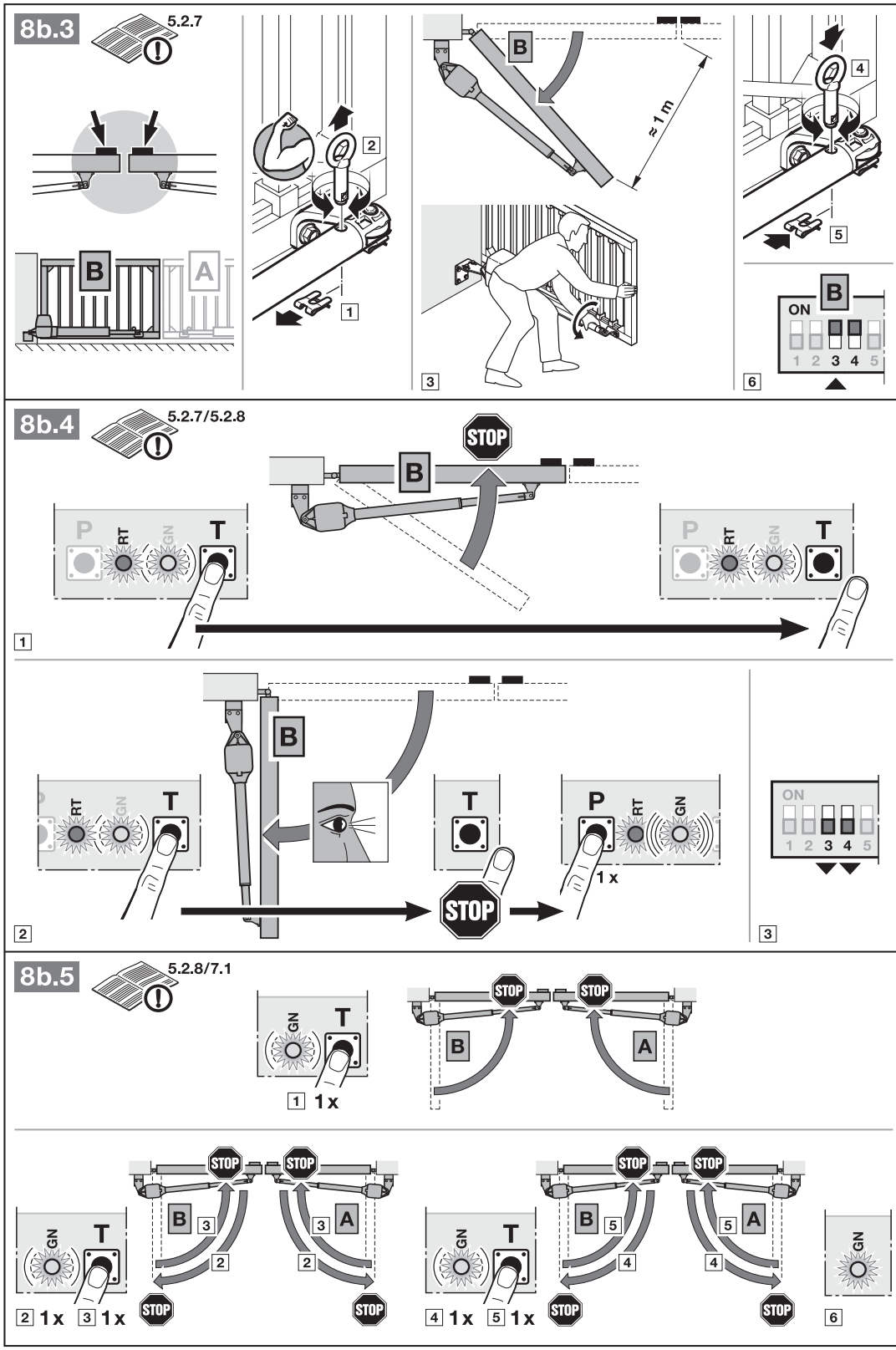
8b.3
5.2.7
B
A
2
1
B
≈ 1 m
3
4
5
B
ON
1 2 3 4 5
6
8b.4
5.2.7/5.2.8
STOP
B
P
RT
GN
T
1
B
T
P
RT
GN
1 x
2
ON
1 2 3 4 5
3
8b.5
5.2.8/7.1
GN
T
1 1x
STOP
STOP
B
A
GN
T
2 1x 3 1x
B 3
2
3 A
2
STOP
STOP
GN
T
4 1x 5 1x
B 5
4
5 A
4
STOP
STOP
6
GN

9.1 4.2.11/5.2.9

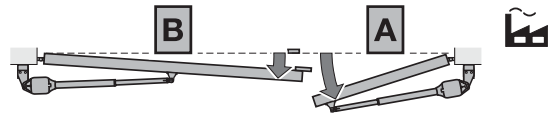

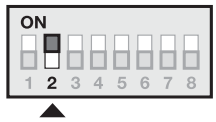

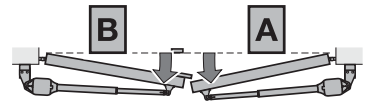

9.2 4.2.11/5.2.9

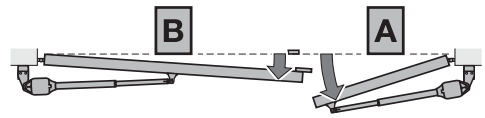

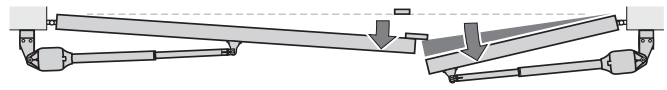

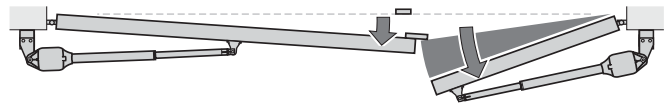

10 7.1.1

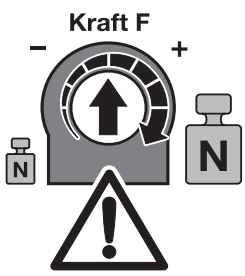

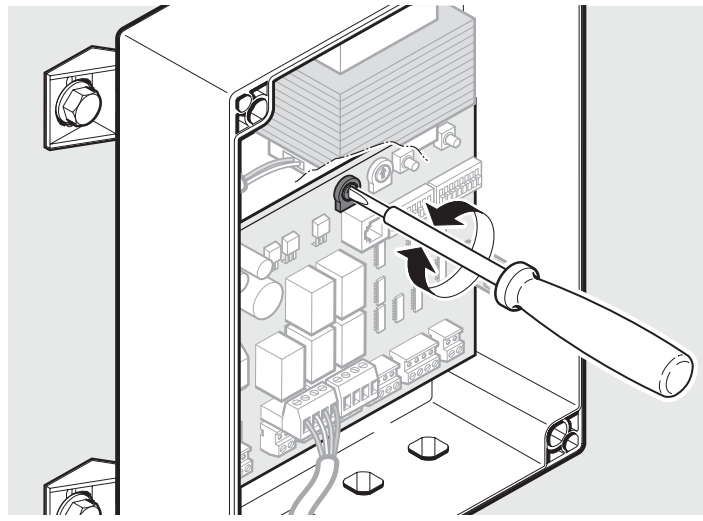

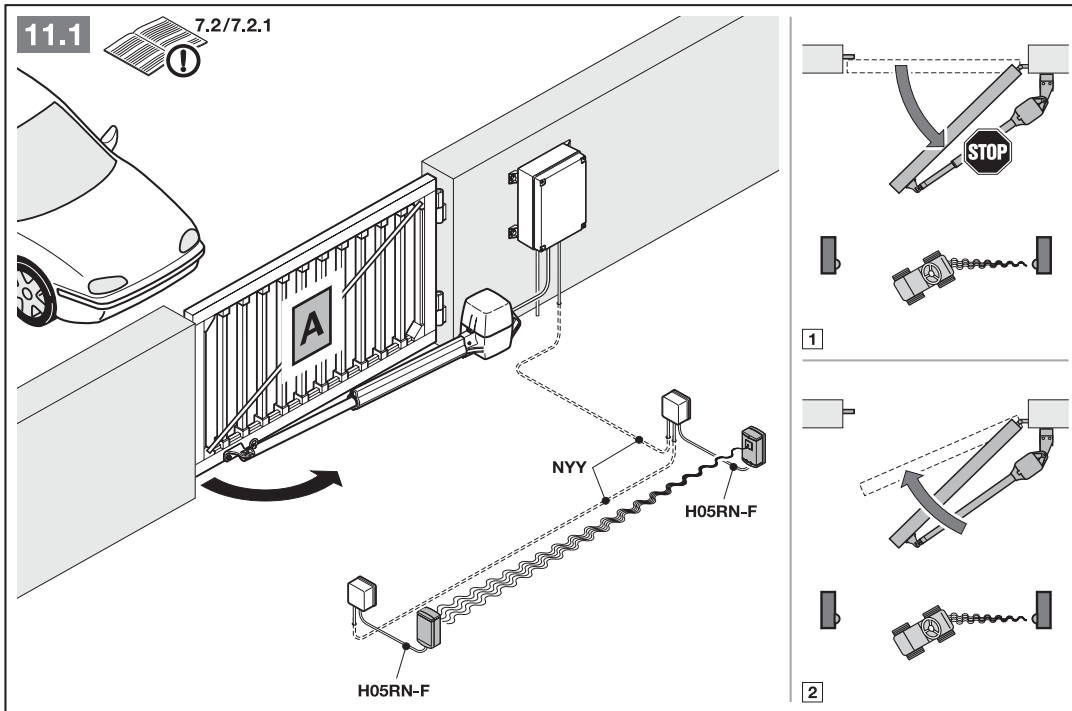
11.1
7.2/7.2.1
A
NYY
H05RN-F
H05RN-F
STOP
1
2

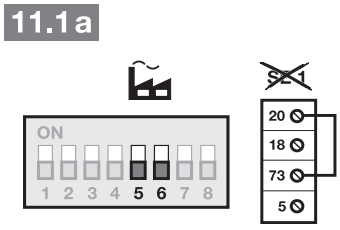
11.1a
ON
1 2 3 4 5 6 7 8
SE 1
20
18
73
5

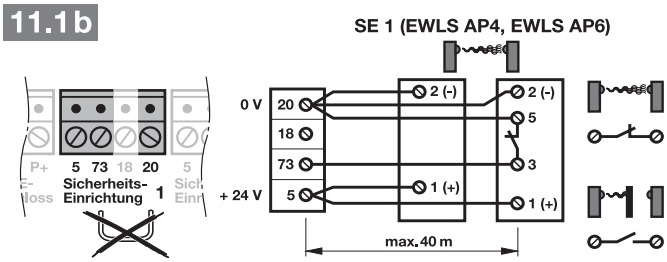
11.1b
SE 1 (EWLS AP4, EWLS AP6)
P+
E-
5 73 18 20
Sicherheits-
Einrichtung
1
0 V
+ 24 V
20
18
73
5
2 (-)
2 (-)
5
3
1 (+)
1 (+)
max. 40 m

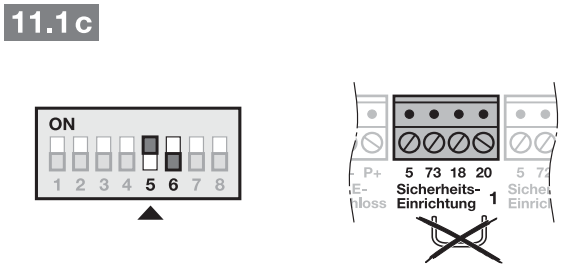
11.1c
ON
1 2 3 4 5 6 7 8
P+
E-
5 73 18 20
Sicherheits-
Einrichtung
1
SE 1 – EL31
TX
RX
0 V
+ 24 V
20
18
73
5
GN
GN
WH
WH
BN
BN
20
18
5
20
71
5
max. 40 m

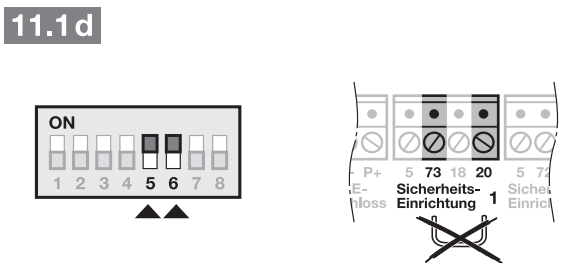
11.1d
ON
1 2 3 4 5 6 7 8
P+
E-
5 73 18 20
Sicherheits-
Einrichtung
1
SE 1 – EL301
TX
RX
0 V
20
18
73
5
0 V
TX
0 V
RX
max. 40 m

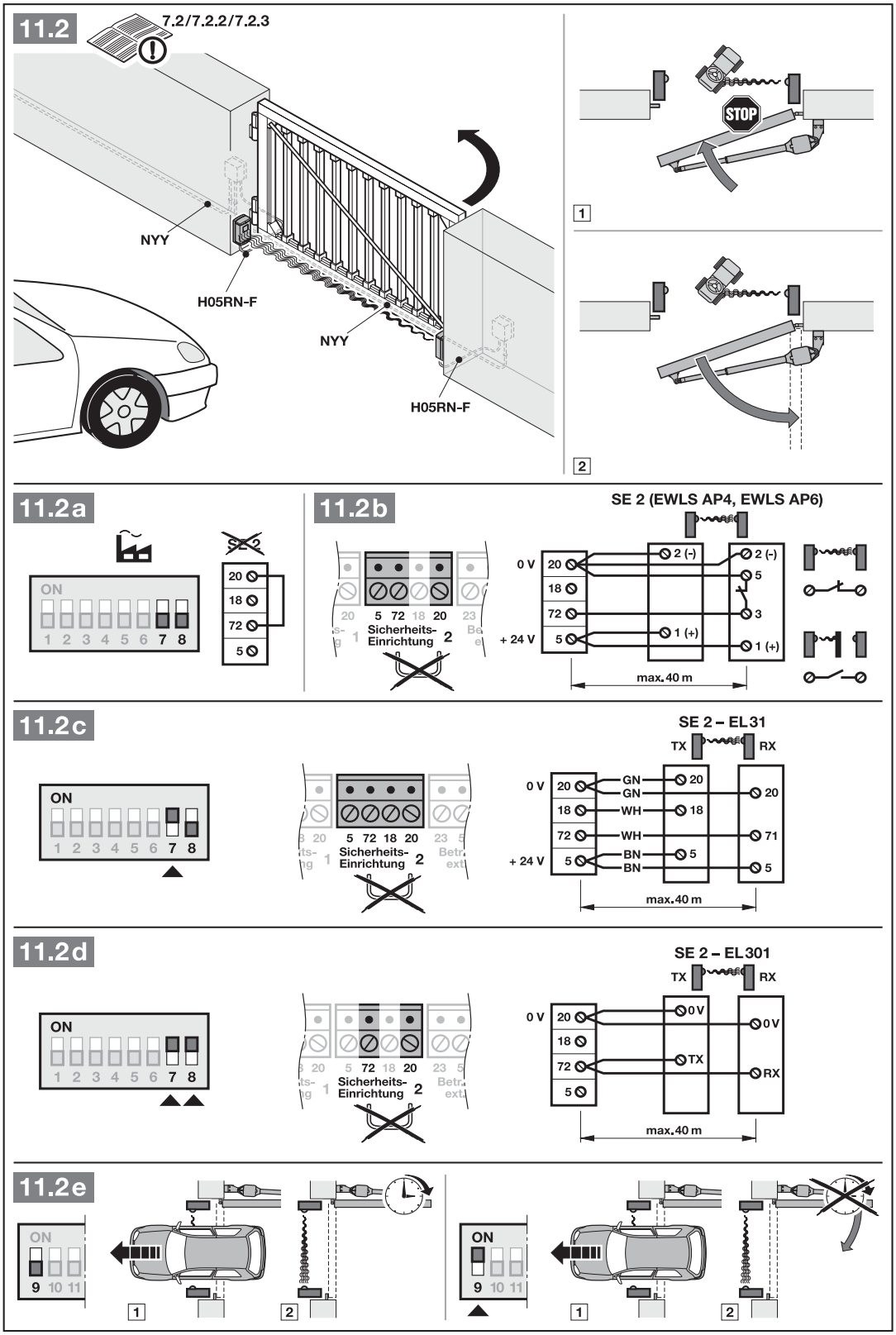
11.2
7.2/7.2.2/7.2.3
NYY
H05RN-F
NYY
H05RN-F
STOP
1
2
11.2a
ON
1 2 3 4 5 6 7 8
SE 2
20
18
72
5
11.2b
SE 2 (EWLS AP4, EWLS AP6)
20 5 72 18 20 23
Sicherheits-
Einrichtung 2
0 V
+ 24 V
2 (-)
1 (+)
max. 40 m
11.2c
SE 2 – EL31
TX
RX
GN
WH
BN
71
11.2d
SE 2 – EL301
0 V
TX
RX
11.2e
ON
9 10 11

11.3a

7.3.1

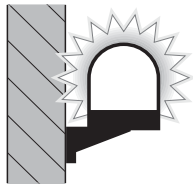

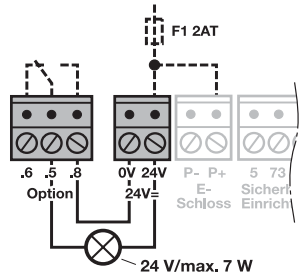

11.3b

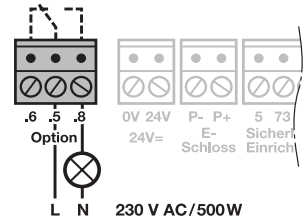

11.4

7.3.2

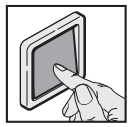

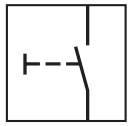

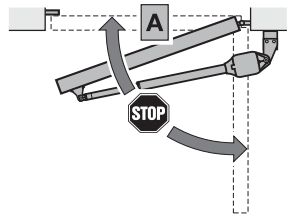

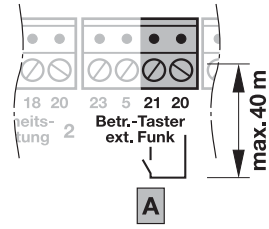

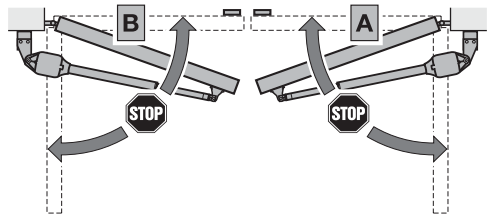

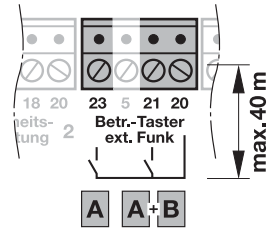

11.5

7.3.3

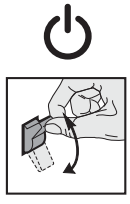

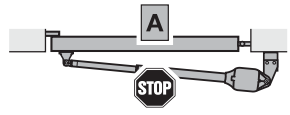

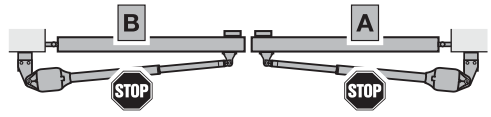

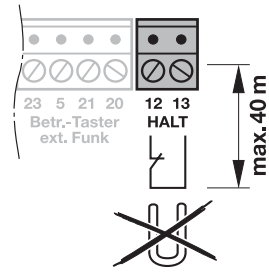

11.6 7.3.4

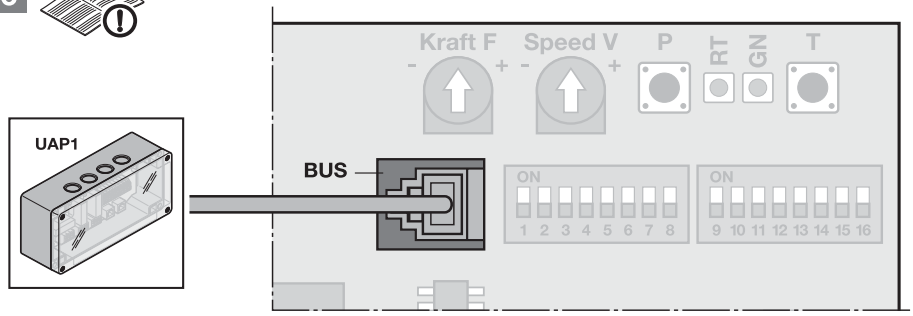

11.7 7.3.5

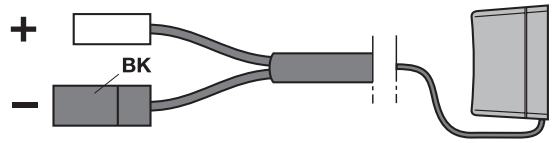

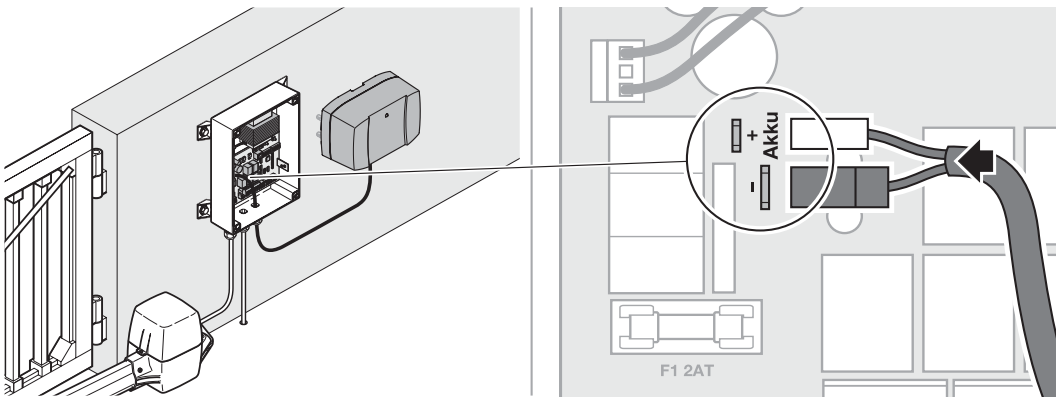

11.8 8.2

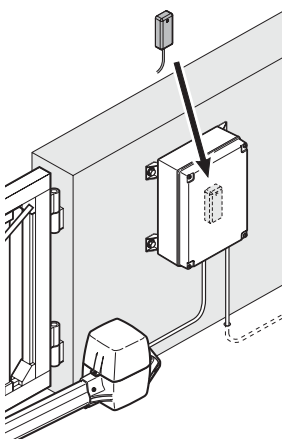

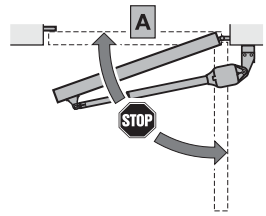

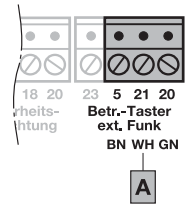

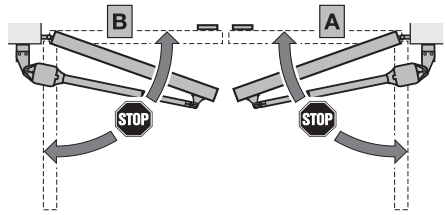

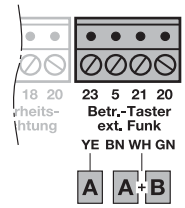

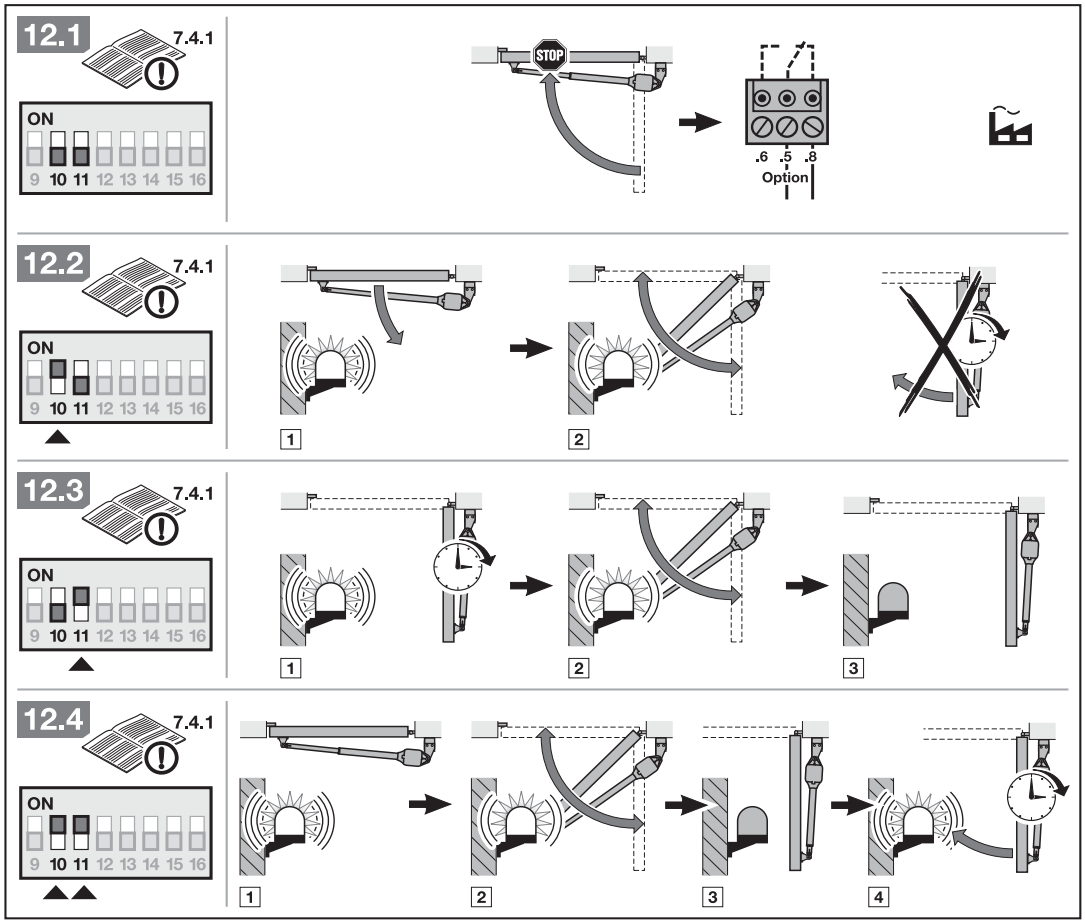
12.1
7.4.1
ON
9 10 11 12 13 14 15 16
STOP
.6 .5 .8
Option
12.2
7.4.1
ON
9 10 11 12 13 14 15 16
1
2
12.3
7.4.1
ON
9 10 11 12 13 14 15 16
1
2
3
12.4
7.4.1
ON
9 10 11 12 13 14 15 16
1
2
3
4

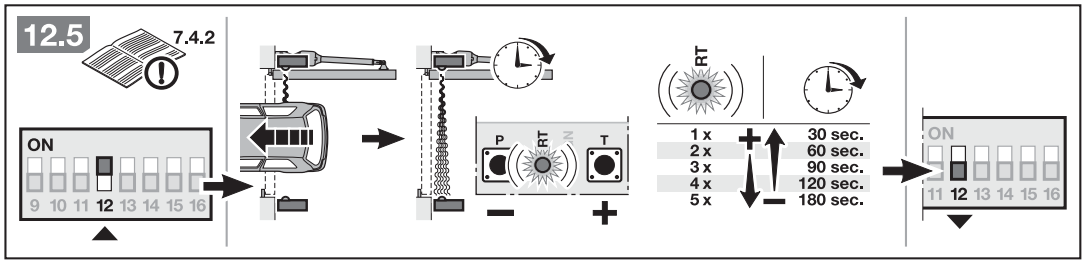
12.5
7.4.2
ON
9 10 11 12 13 14 15 16
P
RT
T
1 x 30 sec.
2 x 60 sec.
3 x 90 sec.
4 x 120 sec.
5 x 180 sec.
ON
11 12 13 14 15 16

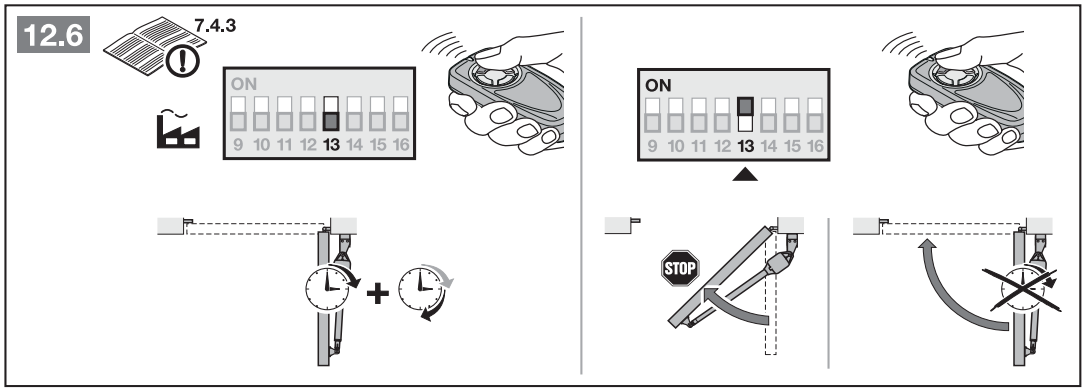
12.6
7.4.3
ON
9 10 11 12 13 14 15 16
ON
9 10 11 12 13 14 15 16
STOP

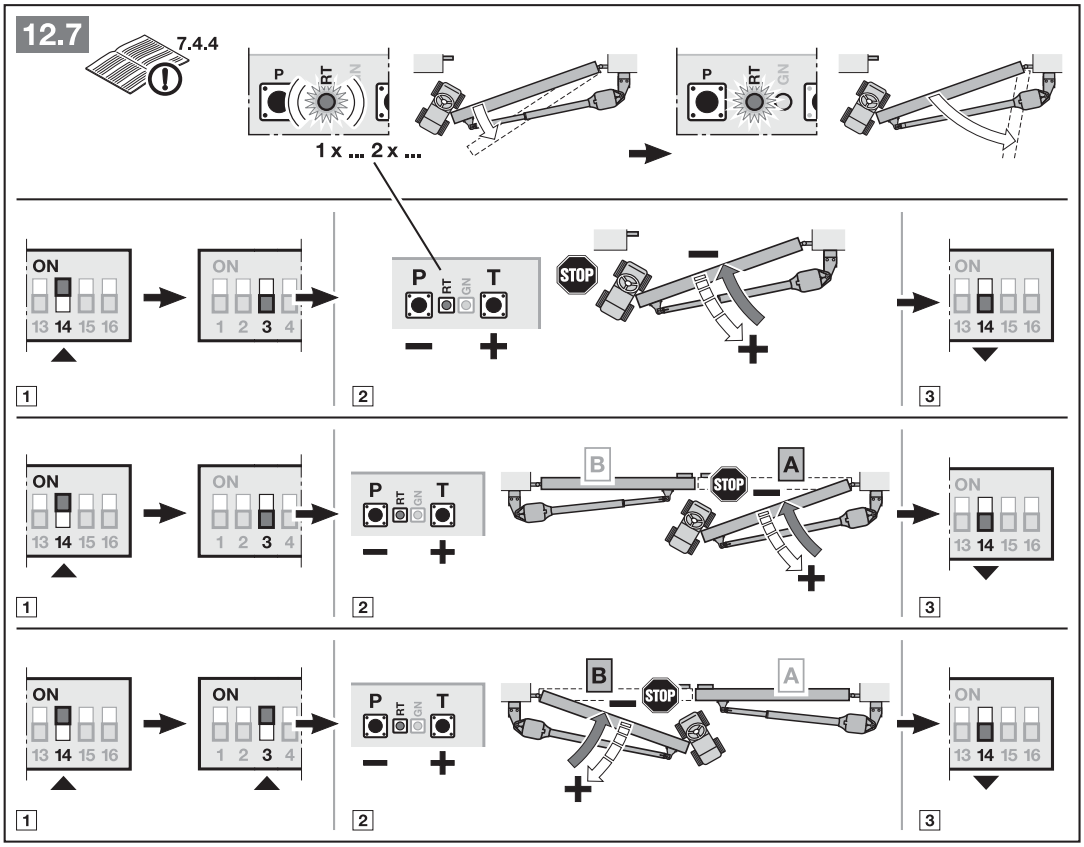
12.7
7.4.4
P
RT
GN
1 x ... 2 x ...
ON
13 14 15 16
1 2 3 4
T
STOP
A
B
1
2
3

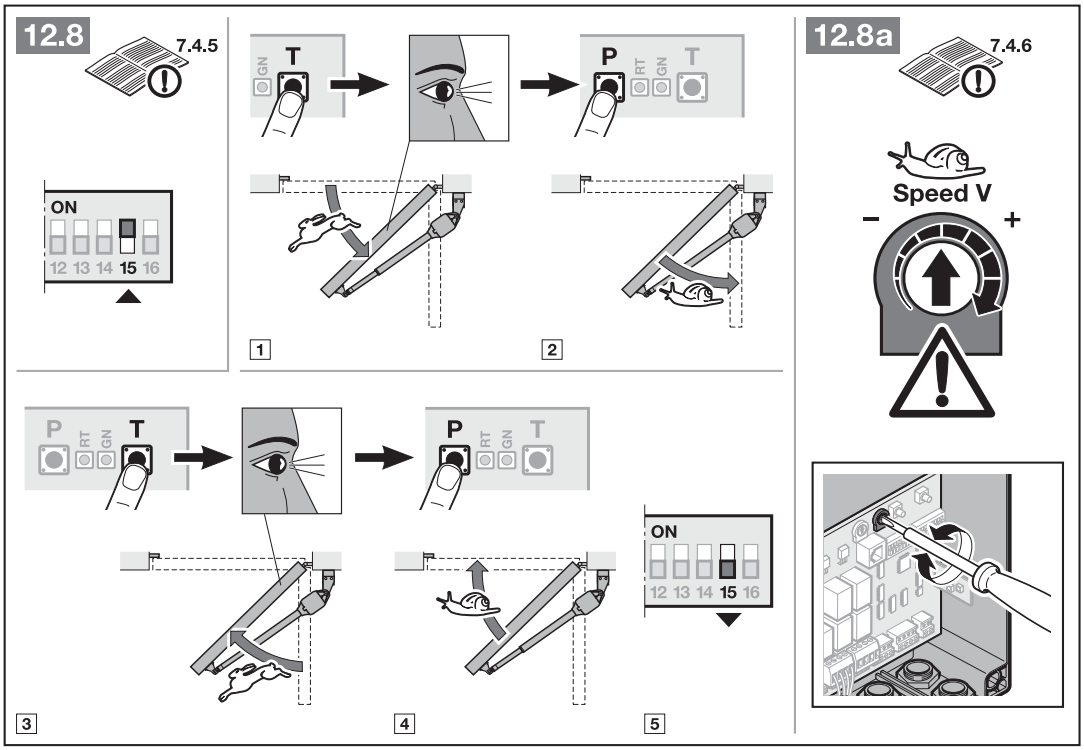
12.8
7.4.5
12.8a
7.4.6
ON
12 13 14 15 16
P
RT
GN
T
Speed V
1
2
3
4
5

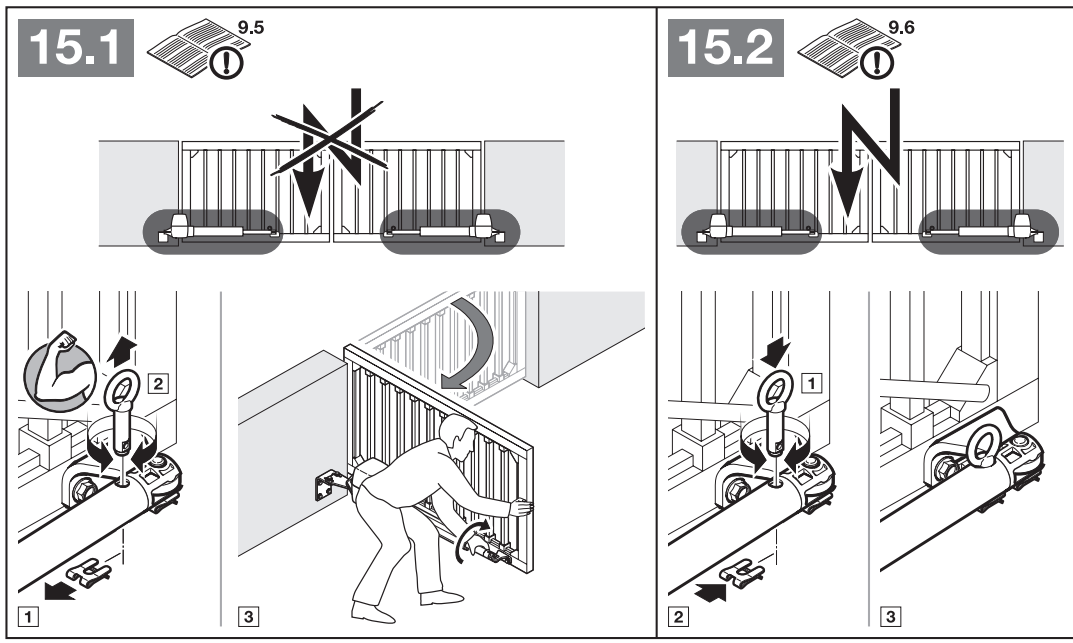
15.1
9.5
2
1
3
15.2
9.6
1
2
3

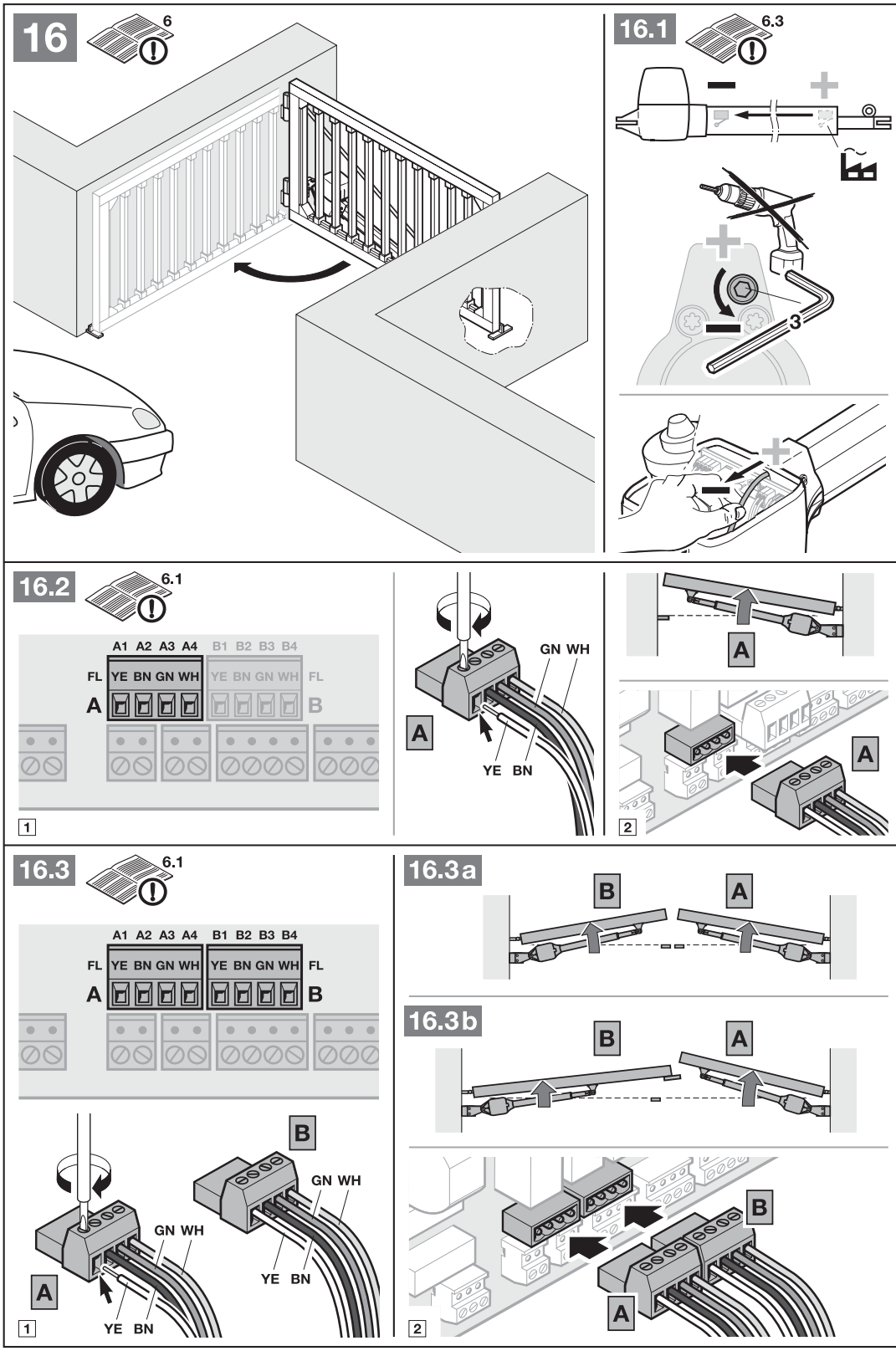
16
6
16.1
6.3
3
16.2
6.1
A1 A2 A3 A4 B1 B2 B3 B4
FL YE BN GN WH YE BN GN WH FL
A B
GN WH
YE BN
A
1
2
16.3
6.1
A1 A2 A3 A4 B1 B2 B3 B4
FL YE BN GN WH YE BN GN WH FL
A B
GN WH
YE BN
A
B
1
2
16.3a
16.3b
A
B

Instructions for Fitting, Operating and Maintenance

Hinge Gate operator

DA20

4Ddoors

FOR HOME AND INDUSTRY

www.4ddoors.com.au

2905827 Rev. 1.0 / 23.10.2014